Zoning Resolution

THE CITY OF NEW YORK
Eric Adams, Mayor

CITY PLANNING COMMISSION
Daniel R. Garodnick, Chair

Chapter 9 - Special Gowanus Mixed Use District (G)

File generated by https://zr.planning.nyc.gov on 11/20/2023

Chapter 9 - Special Gowanus Mixed Use District (G)

139-00 - GENERAL PURPOSES

LAST AMENDED
11/23/2021

The "Special Gowanus Mixed Use District" established in this Resolution is designed to promote and protect the public health, safety and general welfare of the Gowanus neighborhood and the greater community. These general goals include, among others, the following specific purposes:

(a) to recognize and enhance the vitality and character of an existing mixed use neighborhood;

(b) to encourage stability and growth in the Gowanus neighborhood by permitting compatible light manufacturing and residential uses to coexist;

(c) to encourage investment in a mixed use neighborhood by permitting the expansion and new development of a wide variety of uses in a manner that ensures the health and safety of residents and employees;

(d) to improve the physical appearance of the streetscape by providing and coordinating harmonious open space, sidewalk amenities and landscaping within a consistent urban design;

(e) to promote and enhance visual and physical access to and around the Gowanus Canal;

(f) to enhance neighborhood economic diversity by broadening the range of housing choices for residents at varied incomes;

(g) to expand local employment opportunities and to promote the opportunity for workers to live in the vicinity of their work; and

(h) to promote the most desirable use of land and thus conserve the value of land and buildings and thereby protect the City's tax revenues.

139-01 - Definitions

LAST AMENDED
11/23/2021

Definitions specifically applicable to this Chapter are set forth in this Section. Other defined terms are set forth in Sections 12-10, 37-311, 62-11 and 66-11. The definition of #development# shall be as set forth in Section 12-10, except where otherwise specified.

Gowanus mix uses

"Gowanus mix uses" are #community facility#, #commercial#, and #manufacturing uses# set forth in Section 139-12 (Gowanus Mix Uses).

Gowanus retail and entertainment uses

"Gowanus retail and entertainment uses" are #community facility# and #commercial uses# set forth in Section 139-13 (Gowanus Retail and Entertainment Uses).

Mixed use district

In the #Special Gowanus Mixed Use District#, a "mixed use district" shall be any M1 District paired with a #Residence District#, as indicated on the #zoning maps#. For the purposes of applying provisions of districts adjacent to a #mixed use district#, a #mixed use district# shall be considered a #Manufacturing District#.

Select community facility uses

For the purposes of this Chapter, the following #community facility uses# shall also be considered "select community facility uses":

Houses of worship, rectories or parish houses; and

Health facilities requiring approval under Article 28 of the Public Health Law of the State of New York that, prior to July 10, 1974, have received approval of Part I of the required application from the Commissioner of Health.

139-02 - General Provisions

LAST AMENDED
11/23/2021

In harmony with the general purposes and content of this Resolution and the general purposes of the #Special Gowanus Mixed Use District#, the regulations of this Chapter shall apply within the #Special Gowanus Mixed Use District#. The regulations of all other Chapters of this Resolution are applicable, except as modified, supplemented or superseded by the provisions of this Chapter. In the event of a conflict between the provisions of this Chapter and other regulations of this Resolution, the provisions of this Chapter shall control.

139-021 - Applicability of regulations to the Gowanus Canal

LAST AMENDED
11/23/2021

In the #Special Gowanus Mixed Use District#, all #blocks# bounding the Gowanus Canal shall be considered #waterfront blocks# within the #waterfront area#, and the provisions of Article VI, Chapter 2 (Special Regulations Applying in the Waterfront Area), as modified by the provisions of this Chapter, shall apply.

All #zoning lots# having a boundary within or coincident with the boundaries of the Gowanus Canal, shall be considered #waterfront zoning lots#. All portions of such a #zoning lot# shall be included as part of the #upland lot# and deemed to be #lot area#, regardless of the location of the #shoreline#.

For the purposes of this Chapter, the boundaries of the Gowanus Canal shall be as shown on the City Map, and shall include the First Street Basin.

139-022 - Applicability of the Inclusionary Housing Program

LAST AMENDED
11/23/2021

For the purposes of applying the Inclusionary Housing Program provisions set forth in Sections 23-154 and 23-90 (INCLUSIONARY HOUSING), #Mandatory Inclusionary Housing areas# within the #Special Gowanus Mixed Use District# are shown on the maps in APPENDIX F (Inclusionary Housing Areas and Mandatory Inclusionary Housing Areas) of this Resolution. Such provisions are modified by the provisions of this Chapter.

139-023 - Applicability of the Quality Housing Program

LAST AMENDED
11/23/2021

In the #Special Gowanus Mixed Use District#, all #buildings# containing #residences# shall be #developed# or #enlarged# in accordance with the Quality Housing Program and the regulations of Article II, Chapter 8 (The Quality Housing Program) shall apply. Such #buildings# shall be considered #Quality Housing buildings#

139-024 - Applicability of Article VI, Chapter 4

LAST AMENDED
11/23/2021

In the event of a conflict between the provisions of this Chapter and the provisions of Article VI, Chapter 4 (Special Regulations Applying in Flood Hazard Areas), the provisions of Article VI, Chapter 4, shall control.

139-025 - Applicability of Article VI, Chapter 6

LAST AMENDED
11/23/2021

For #transit-adjacent sites#, as defined in Section 66-11 (Definitions), in the event of a conflict between the provisions of this Chapter and the provisions of Article VI, Chapter 6 (Special Regulations Applying Around Mass Transit Stations), the provisions of Article VI, Chapter 6 shall control.

139-026 - Applicability of Article XII, Chapter 3

LAST AMENDED
11/23/2021

In #Mixed Use Districts#, the special #use#, #bulk#, and parking and loading provisions of Article XII, Chapter 3 (Special Mixed Use Districts) shall apply, except where modified by the provisions of this Chapter, and shall supplement or supersede the provisions of the designated #Residence# or M1 District, as applicable.

Notwithstanding the provisions of Section 123-10, in the event of a conflict between the provisions of this Chapter and the provisions of Article XII, Chapter 3, the provisions of this Chapter shall control.

139-03 - District Plan and Maps

LAST AMENDED
11/23/2021

The regulations of this Chapter are designed to implement the #Special Gowanus Mixed Use District# Plan. The district plan includes the following maps in the Appendices to this Chapter:

Appendix A – #Special Gowanus Mixed Use District# Plan

Map 1 Subdistricts

Map 2 Subareas

Map 3 Ground Floor Use Requirements

Map 4 Sidewalk Widening Lines

Appendix B – Gowanus Canal Waterfront Access Plan

Map 1 Parcel Designation

Map 2 Public Access Elements

Map 3 Designated Visual Corridors

The maps are hereby incorporated and made part of this Resolution for the purpose of specifying locations where the special regulations and requirements set forth in the text of this Chapter apply.

139-04 - Subdistricts

LAST AMENDED
11/23/2021

In order to carry out the purposes and provisions of this Chapter, five subdistricts are established within the #Special Gowanus Mixed Use District#. In addition, subareas are established within Subdistricts B and D.

Subdistrict A – Fourth Avenue Subdistrict

Subdistrict B – Upland Blocks Subdistrict

Subarea B1

Subarea B2

Subdistrict C – North Canal Corridor Subdistrict

Subdistrict D – South Canal Corridor Subdistrict

Subarea D1

Subarea D2

Subarea D3

Subarea D4

Subarea D5

Subarea D6

Subdistrict E – First Street Subdistrict

The boundaries of the subdistricts are shown on Map 1 and the boundaries of the subareas are shown on Map 2 in Appendix A of this Chapter.

139-10 - SPECIAL USE REGULATIONS

LAST AMENDED
11/23/2021

In Subdistricts A, B, C, and D the underlying #use# regulations shall be modified by the provisions of this Section, inclusive. In Subdistrict E, the underlying district regulations shall apply.

139-11 - Permitted Uses

LAST AMENDED
11/23/2021

139-111 - Permitted Uses in Manufacturing Districts

LAST AMENDED
11/23/2021

In all #Manufacturing Districts#, in addition to the #uses# specified in Article IV, Chapter 2, the following #uses# shall also be permitted:

(a) colleges or universities, including professional schools but excluding business colleges or trade schools, libraries, museums, or non-commercial art galleries, and #schools# listed in Use Group 3, as set forth in Section 22-13;

(b) community centers or settlement houses, non-commercial recreation centers, philanthropic or non-profit institutions without sleeping accommodations, hospitals, and agricultural #uses# listed in Use Group 4, as set forth in Section 22-14;

(c) food stores, including supermarkets, grocery stores or delicatessen stores, as set forth in Section 32-15 (Use Group 6), without limitation as to #floor area# per establishment; and

(d) the manufacture of alcoholic beverages and breweries, as set forth in Section 42-15 (Use Group 18), without limitation as to #floor area# per establishment. The provisions of Section 42-27 (Performance Standards Regulating Fire and Explosive Hazards) shall not apply to such #use#.

139-112 - Permitted Uses in Mixed Use Districts

LAST AMENDED
11/23/2021

In all #Mixed Use Districts#, in addition to the #uses# specified in Article XII, Chapter 3, the following #uses# shall also be permitted:

(a) food stores, including supermarkets, grocery stores or delicatessen stores, as set forth in Section 32-15 (Use Group 6), without limitation as to #floor area# per establishment;

(b) all uses in Use Group 10A, as specified in Section 32-19, limited to 25,000 square feet of #lot area# per establishment; and

(c) the manufacture of alcoholic beverages and breweries, as set forth in Section 42-15 (Use Group 18), without limitation as to #floor area# per establishment. The provisions of Section 42-27 (Performance Standards Regulating Fire and Explosive Hazards) shall not apply to such #use#.

139-12 - Gowanus Mix Uses

LAST AMENDED
11/23/2021

For the purposes of applying the special #bulk# regulations of Section 139-212 (Gowanus mix), the following #community facility#, #commercial#, and #manufacturing uses# shall also be considered #Gowanus mix uses#:

From Use Group 3, as set forth in Section 22-13:

libraries, museums, and non-commercial art galleries, as listed in Use Group 3A;

From Use Group 4, as set forth in Section 22-14:

community centers or settlement houses and non-profit institutions without sleeping accommodations as listed in Use Group 4A;

agriculture, including greenhouses, nurseries, and truck gardens as listed in use Group 4B;

From Use Group 6, as set forth in Section 32-15:

custom tailoring, as listed in Use Group 6A;

From Use Group 7, as set forth in Section 32-16:

bike rental or repair, sailmaking stores, sign painting shops, and taxidermy shops as listed in Use Group 7B;

From Use Group 8: as set forth in Section 32-17:

lumber stores and home appliance repair shops as listed in Use Group 8B;

From Use Group 9, as set forth in Section 32-18:

blueprinting; costume rental; instrument repair; printing establishments; studios, art, music, dancing or theatrical; trade schools for adults; and umbrella repair shops as listed in Use Group 9A;

photographic printing or developing as listed in Use Group 9B;

From Use Group 10, as set forth in Section 32-19:

photographic or motion picture production studios; radio or television studios;

From Use Group 11, as set forth in Section 32-20:

all #uses# listed in Use Groups 11A;

From Use Group 14, as set forth in Section 32-23:

bicycle rental or repair, and boat storage, repair, and painting, as listed in Use Group 14A;

From Use Group 16, as set forth in Section 32-25:

blacksmith shops; carpentry or custom woodworking; custom furniture making; building contractor supply stores; fuel, ice, oil, coal, wood sales; household and office equipment or machinery repair shops; machinery rental or sales establishments; mirror silvering or glass cutting shops; and tool, die, and pattern making shops as listed in Use Group 16A;

From Use Group 17, as set forth in Section 42-14:

all #uses# listed in Use Group 17B;

From Use Group 18, as set forth in Section 42-15:

breweries and alcoholic beverage manufacturing.

139-13 - Gowanus Retail and Entertainment Uses

LAST AMENDED
11/23/2021

For the purposes of applying the basic #floor area ratio# regulations of Section 139-21, the following #community facility# and #commercial uses# shall also be considered #Gowanus retail and entertainment uses#:

From Use Group 3, as set forth in Section 22-13:

non-commercial art galleries;

From Use Group 6, as set forth in Section 32-15:

all #uses# listed in Use Group 6A, 6C, and 6E;

From Use Group 8, as set forth in Section 32-17:

all #uses# listed in Use Group 8A;

From Use Group 9, as set forth in Section 32-18

automobile, motorcycle, trailer, or boat showrooms or sales, banquet halls, catering establishments, gymnasiums, #health and fitness establishments#;

From Use Group 10, as set forth in Section 32-19:

all #uses# listed in Use Group 10A;

From Use Group 12, as set forth in Section 32-21:

all #uses# listed in Use Groups 12A and 12B;

From Use Group 13, as set forth in Section 32-22:

all #uses# in Use Group 13A and 13B;

From Use Group 14, as set forth in Section 32-23:

bicycle sales; candy or ice cream stores; and non-commercial clubs without restrictions on activities or facilities.

139-14 - Supplementary Use Regulations

LAST AMENDED
11/23/2021

139-141 - Location of commercial uses in mixed buildings

LAST AMENDED
11/23/2021

(a) Commercial Districts

In #Commercial Districts#, the underlying provisions of Section 32-422 (Location of floors occupied by commercial uses) shall be modified, for #mixed buildings# that are #developed# or #enlarged# after November 23, 2021, to permit #dwelling units# on the same #story# as a #commercial use#, provided no access exists between such #uses# at any level containing #dwelling units# and provided no #commercial uses# are located directly over any #dwelling units#. However, such #commercial uses# may be located over #dwelling units# by authorization of the City Planning Commission upon a finding that sufficient separation of #residential uses# from #commercial uses# exists within the #building#.

(b) Mixed Use Districts

In #Mixed Use Districts#, the provisions of paragraph (c)(2) of Section 123-31 (Provisions Regulating Location of Uses in Mixed Use Buildings) shall be modified to allow #commercial# and #manufacturing uses# to be located over #dwelling units# by authorization of the City Planning Commission upon a finding that sufficient separation of #residential uses# from such #uses# exists within the #building#.

139-142 - Enclosure of uses

LAST AMENDED
11/23/2021

In #Manufacturing Districts#, the underlying regulations of Section 42-40 (SUPPLEMENTARY USE REGULATIONS AND SPECIAL PROVISIONS APPLYING ALONG DISTRICT BOUNDARIES) shall apply, except that all storage of materials or products shall be located within #completely enclosed buildings# regardless of distance from a #Residence District#.

139-15 - Special Sign Regulations

LAST AMENDED
11/23/2021

In the #Special Gowanus Mixed Use District#, the underlying #sign# regulations shall apply, except that:

(a) in #Manufacturing Districts#, the #sign# regulations of a C6-1 District, as set forth in Section 32-60, shall apply; and

(b) any #accessory signs# that are provided adjacent to a #shore public walkway# shall be governed by the provisions of Section 139-55 (Special Signage Regulations).

139-20 - SPECIAL BULK REGULATIONS

LAST AMENDED
11/23/2021

In Subdistricts A, B, C and D, the #bulk# regulations of the applicable underlying districts shall be modified by the provisions of this Section, inclusive. In Subdistrict E, the underlying regulations shall apply.

In Subdistrict A, the provisions of Section 34-112 (Residential bulk regulations in other C1 or C2 Districts or in C3, C4, C5 or C6 Districts) and paragraph (b) of Section 35-23 (Residential Bulk Regulations in Other C1 or C2 Districts or in C3, C4, C5, or C6 Districts) shall be modified so that, in C4-4D Districts, the applicable #Residence District# shall be an R9A District, as modified by the provisions of this Chapter.

139-21 - Floor Area Regulations

LAST AMENDED
11/23/2021

Basic #floor area# regulations are established in Section 139-211. Such regulations may be modified by the provisions of this Section, inclusive.

The basic maximum #floor area ratios# may be increased for certain #zoning lots# pursuant to Sections 139-212 (Gowanus mix) and 139-213 (Special floor area provisions for transit improvements).

Special regulations for #community facility floor area# on #zoning lots# containing #schools# are set forth in Section 139-214 (Special floor area provisions for zoning lots containing schools).

Special regulations for certain #zoning lots# are set forth in Section 139-215 (Special floor area provisions for zoning lots containing comfort stations) and 139-216 (Special floor area provisions for street improvements).

For the purposes of applying the provisions of Section 64-322 (Special floor area modifications for flood-resistant buildings), #primary street frontages# shall be the locations designated on Map 3 in the Appendix to this Chapter.

139-211 - Basic floor area regulations

LAST AMENDED
11/23/2021

The maximum #floor area# regulations for each district in the #Special Gowanus Mixed Use District# shall be as set forth in the table in this Section.

Row A establishes the maximum #residential# #floor area ratio# for #MIH sites# where either #affordable floor area# is provided in accordance with the provisions of paragraphs (d)(3)(i) through (d)(3)(iv) or paragraph (d)(5) of Section 23-154 (Inclusionary Housing), or where a contribution to the #affordable housing fund# is made in accordance with paragraph (d)(3)(v) of such Section. For #zoning lots# subject to the provisions of paragraph (d)(4) of Section 23-154, the maximum #floor area ratio# shall be as set forth in Section 23-153 (For Quality Housing buildings).

Row B establishes a maximum #floor area ratio# for #community facility uses#, other than #select community facility uses#.

Row C sets forth the maximum #floor area ratio# for #select community facility uses# only. In addition, special regulations for #schools# are set forth in Section 139-214.

Row D establishes a maximum #floor area ratio# for #Gowanus retail and entertainment uses# only.

Row E establishes a maximum #floor area ratio# for all #commercial uses#, inclusive of #Gowanus retail and entertainment uses# .

Row F sets forth the maximum #floor area ratio# for #manufacturing# uses.

MAXIMUM FLOOR AREA RATIO

		C4-4D	M1-4		M1-4 / R6B	M1-4 / R6A	M1-4 / R7A	M1-4 / R7-2	M1-4 / R7X
			Subarea B1	Subarea B2					
A	Maximum #FAR# for #residential uses# for #MIH Sites#	8.5	-	-	2.2	3.6	4.6	4.4	5.4
B	Maximum #FAR# for #community facility uses#	6.5	3.6	2.7	2.0	3.0	4.0	4.0	5.0
C	Maximum #FAR# for #select community facility uses#	6.5	4.8	4.8	2.0	3.0	4.0	4.0	5.0
D	Maximum #FAR# for #Gowanus retail and entertainment uses#	3.4	2.0	2.0	2.0	2.0	2.0	2.0	2.0
E	Maximum #FAR# for #commercial uses#	3.4	3.6[1]	2.7[2]	2.0	3.0	3.0	3.0	4.0
F	Maximum #FAR# for #manufacturing uses#	-	3.6[1]	2.7[2]	2.0	3.0	3.0	3.0	4.0

[1] In #Manufacturing Districts# within Subarea B1, #commercial# and #manufacturing uses# which are also #Gowanus mix uses# shall have a maximum #floor area ratio# of 4.0.

[2] In #Manufacturing Districts# within Subarea B2, #commercial# and #manufacturing uses# which are also #Gowanus mix uses# shall have a maximum #floor area ratio# of 3.0.

139-212 - Gowanus mix

LAST AMENDED
11/23/2021

In M1 Districts paired with R7-2 or R7X Districts, the provisions of this Section may be utilized to increase the maximum #floor area ratio# set forth Section 139-211 (Basic floor area regulations).

(a) Inclusion of #Gowanus mix uses#

For #zoning lots# with #buildings# containing both #residential# #uses# and #Gowanus mix uses#, the maximum #floor area ratio# may be increased by the amount of #Gowanus mix uses# provided on the #zoning lot#, up to a #floor area ratio# of 0.3.

(b) Inclusion of both #Gowanus mix uses# and non-#residential# #uses#

For #zoning lots# utilizing the provisions of paragraph (a) of this Section, the maximum #floor area ratio# may be further increased by the amount of non-#residential# #uses# provided on the #zoning lot#, up to a #floor area ratio# of 0.3.

(c) Compliance and recordation

A Notice of Restrictions, the form and content of which shall be satisfactory to the City Planning Commission, for a property subject to inclusion of #Gowanus mix uses# pursuant to this Section, shall be recorded against the subject tax lot in the Office of the City Register.

The filing and recordation of such Notice of Restrictions shall be a precondition to the issuance of any building permit utilizing the provisions set forth in this Section. The recording information shall be referenced on the first certificate of occupancy to be issued after such notice is recorded, as well as all subsequent certificates of occupancy, for as long as the restrictions remain in effect.

(d) Annual reporting for #Gowanus mix uses#

No later than June 30 of each year, beginning in the first calendar year following the calendar year in which the first temporary or final certificate of occupancy was issued for a #building# utilizing the provisions of paragraph (b) of this Section, the #building# owner shall submit annually to the Chairperson of the City Planning Commission, Speaker of the City Council, and Brooklyn Community Board 6, a report on the existing conditions of #floor area# designated for #Gowanus mix uses# and include the information specified below:

(1) the date of the most recent update of this information;

(2) total #floor area# of the #Gowanus mix uses# in the #development#, pursuant to paragraph (b) of this Section;

(3) the name of each establishment occupying #floor area# reserved for #Gowanus mix uses#. Such establishment name shall include that name by which the establishment does business and is known to the public. For each establishment, the amount of #floor area#, the Use Group, subgroup and specific #use# as listed in this Resolution shall also be included;

(4) contact information, including the name of the owner of the #building# and the building management entity, if different, the name of the person designated to manage the #building#, and the

street address, current telephone number and e-mail address of the management office. Such names shall include the names by which the owner and manager, if different, do business and are known to the public; and

(5) all prior periodic notification information required pursuant to the provisions of this paragraph.

The report shall be submitted by any method, including e-mail or other electronic means, acceptable to the Chairperson of the City Planning Commission.

#Floor area# provided to satisfy the requirements of Section 139-41 (Ground Floor Level Requirements) may not be utilized to satisfy the requirements of this Section.

139-213 - Special floor area provisions for transit improvements

LAST AMENDED
11/23/2021

In #Commercial Districts#, the #floor area ratios# set forth in Section 139-211 (Basic floor area regulations) may be increased by up to 20 percent, pursuant to the provisions of Section 139-46 (Certification for Transit Improvements). Where the #residential# #floor area ratio# is increased, such additional #floor area# shall be exempt from the requirements of paragraph (d) of Section 23-154.

139-214 - Special floor area provisions for zoning lots containing schools

LAST AMENDED
11/23/2021

(a) As-of-right provisions

The provisions of this paragraph (a) shall apply to #zoning lots# with a #lot area# greater than 30,000 square feet, and which contain #schools# constructed in whole or in part pursuant to an agreement with the New York City School Construction Authority and subject to the jurisdiction of the New York City Department of Education.

On such #zoning lots#, up to 60,000 square feet of floor space within such #school# or, in Subarea D4 up to 100,000 square feet of floor space within such #school#, shall be exempt from the definition of #floor area#.

(b) Special permit provisions

In #Manufacturing Districts# within Subareas B1 or B2, the Board of Standards and Appeals may permit the allowable #community facility# #floor area ratio# for #schools# to be increased to 4.8, provided that the Board finds that the distribution of #bulk# on the #zoning lot# will not unduly obstruct the access to light and air in and to adjoining properties or public #streets#, and will result in satisfactory site planning and satisfactory urban design relationships of #buildings# to adjacent #streets# and the surrounding area. The Board may prescribe appropriate conditions and safeguards to minimize adverse effects on the character of the surrounding area.

139-215 - Special floor area provisions for zoning lots containing comfort stations

LAST AMENDED
11/23/2021

For #zoning lots# containing a comfort station provided in accordance with the provisions of paragraph (c)(2) of Section 139-51 (Area-wide Modifications), an area equal to 200 percent of the floor space within such comfort station may be exempted from the definition of #floor area#.

139-216 - Special floor area provisions for street improvements

LAST AMENDED
11/23/2021

In Subareas D4, D5, and D6, for #zoning lots# containing mapped #streets#, where such mapped #streets# will be improved and opened to the public, the provisions of this Section may apply.

(a) Street area

The #lot area# of a #zoning lot# adjacent to newly improved #street# may be considered to be increased by an amount equal to the area contained within the bed of such #street#, as measured from the centerline of such #street# to the #street line# adjoining the #zoning lot#.

(b) Transfer of #floor area#

#Residential floor area# may be transferred from a granting site to a receiving site located directly across the newly improved #street#, and may exceed the maximum #floor area ratio# permitted on the receiving site, provided that:

(1) the owners of the granting site and the receiving site shall jointly notify the Department of City Planning, in writing, of their intent to transfer #residential# #floor area#. Such notification shall include a site plan showing the conditions and #floor area# calculations for the granting site and the receiving site, before and after the transfer;

(2) no building permit shall be issued by the Department of Buildings for a #building# on a receiving site containing any such transferred #residential# #floor area# until the Chairperson of the City Planning Commission has certified to the Department of Buildings that plans submitted to the Department of City Planning comply with the requirements of this Section; and

(3) no certificate of occupancy shall be issued by the Department of Buildings for any portion of a #building# utilizing the transferred #residential# #floor area# until the Chairperson of the City Planning Commission certifies to the Department of Buildings that such #building# has been constructed in accordance with the plan certified by the Chairperson pursuant to paragraph (b)(2) of this Section.

Notices of restrictions shall be filed by the owners of the granting site and the receiving site in the Office of the Register of the City of New York, indexed against the granting site and the receiving site(s), certified copies of which shall be submitted to the Department of City Planning. Notice by the Department of City Planning of its receipt of certified copies thereof shall be a condition to issuance of a building permit for a #building# on the receiving site containing any such transferred #residential# #floor area#.

The transfer of #residential# #floor area#, once completed, shall irrevocably reduce the maximum #residential# #floor area# permitted on the granting site. Any #building# on a receiving site that uses the #residential# #floor area# so transferred shall comply with all other applicable #bulk# regulations of this Chapter.

139-22 - Special Yard Regulations

LAST AMENDED
11/23/2021

The underlying #yard# and #rear yard equivalent# regulations shall apply, as modified by the provisions of this Section, inclusive.

139-221 - Permitted obstructions in required yards

LAST AMENDED
11/23/2021

In all #Commercial#, #Manufacturing#, and #Mixed Use Districts#, the permitted obstruction provisions of paragraph (b)(3) of Section 33-23 and paragraph (b)(1) of Section 43-23 shall be modified such that, in any #rear yard#, any #building# or portion of a #building# used for any permitted non-#residential use# (except any #building# portion containing rooms used for living or sleeping purposes) shall be a permitted obstruction, provided that the height of such #building#, or portion thereof, shall not exceed two #stories#, excluding #basements#, nor in any event 30 feet above #curb level#.

139-222 - Rear yards and rear yard equivalents

LAST AMENDED
11/23/2021

In all #Manufacturing Districts#, the provisions of 43-26 (Minimum Required Rear Yards) and 43-261 (Beyond one hundred feet of a street line) shall not apply. In lieu thereof, a #rear yard# shall be provided at the minimum depth set forth in the table below for the applicable height above the #base plane#, at every #rear lot line# on any #zoning lot#.

REQUIRED DEPTH OF REAR YARD

Height above #base plane#	Required depth
Below 65 feet	10
Above 65 feet and below 125 feet	15
Above 125 feet	20

In addition, in all #Manufacturing# and #Mixed Use Districts#, the provisions of Section 43-28 (Special Provisions for Through Lots) shall be modified such that no #rear yard equivalent# shall be required on any #through lot# or #through lot# portion of a #zoning lot#.

139-223 - Required yards along district boundaries

LAST AMENDED
11/23/2021

In #Manufacturing# and #Mixed Use Districts#, the provisions of Section 43-304 (Required front yards along district boundary located in a street) shall not apply.

In #Commercial#, #Manufacturing#, and #Mixed Use Districts#, the underlying yard requirements applying along district boundaries of Sections 33-292 (Required yards along district boundary coincident with rear lot lines of two adjoining zoning lots), 33-293 (Required yards along district boundary coincident with side lot line of zoning lot in a Commercial District), 43-302 (Required yards along district boundary coincident with rear lot lines of two adjoining zoning lots) and 43-303 (Required yards along district boundary coincident with side lot line of zoning lot in a Manufacturing District) , shall be superseded by the provisions of this Section as follows:

(a) When #side# or #rear lot lines# coincide with a #side lot line# of a #zoning lot# in an adjoining #Residence District#, an open area not higher than #curb level#, and at least eight feet in depth, shall be provided; and

(b) Where #side# or #rear lot lines# coincide with the #rear lot line# of a #zoning lot# in an adjoining #Residence District#, an open area not higher than 30 feet above #base plane# and at least 20 feet in depth, shall be provided.

139-224 - Waterfront yards

LAST AMENDED
11/23/2021

The provisions of Section 62-33 (Special Yard Regulations on Waterfront Blocks) shall be modified such that a #waterfront yard# shall be provided in accordance with the provisions of Section 62-332 (Rear yards and waterfront yards) on all #waterfront zoning lots#, as that term is defined in Section 62-11, regardless of #use#.

The depth of the #waterfront yard# shall be measured from the #zoning lot line# adjoining the Gowanus Canal, or where the provisions of paragraph (f) of Section 139-51 (Area-wide Modifications) are utilized, from the bulkhead. The depth of the #waterfront yard# may be reduced as set forth in Section 62-332.

139-23 - Special Height and Setback Regulations

LAST AMENDED
11/23/2021

The height and setback regulations of the applicable underlying districts are modified as follows:

(a) In #Commercial Districts#, the height and setback regulations of Section 35-60 (MODIFICATION OF HEIGHT AND SETBACK REGULATIONS) shall apply to all #buildings#, as modified by the provisions of this Section, inclusive.

(b) In #Mixed Use Districts#, the height and setback regulations of Section 123-60 (SPECIAL BULK REGULATIONS) shall apply, as modified by the provisions of this Section, inclusive.

(c) In #Manufacturing Districts#, the underlying height and setback regulations of Sections 43-43 (Maximum Height of Front Wall and Required Front Setbacks), 43-44 (Alternate Front Setbacks), and 43-45 (Tower Regulations) shall not apply. In lieu thereof, minimum and maximum base heights and maximum heights for #buildings or other structures# shall be as set forth in this Section, inclusive. The other underlying regulations of Article IV, Chapter 3 (Bulk Regulations) shall apply, as modified by the provisions of this Section, inclusive.

(d) The special #bulk# regulations applicable in the #waterfront area# of Section 62-30 (SPECIAL BULK REGULATIONS) shall not apply. In lieu thereof, the height and setback regulations of this Section, inclusive, shall control.

The height of all #buildings or other structures# shall be measured from the #base plane#.

139-231 - General provisions

LAST AMENDED
11/23/2021

For the purposes of applying the applicable #bulk# regulations, the boundaries of #waterfront public access areas#, as well as #lot lines# abutting #public parks#, shall be considered #narrow# #street lines #.

Where a continuous sidewalk widening is provided along the entire frontage of a #zoning lot#, the interior boundary of such widening shall be considered a #street line# for the purpose of applying the height and setback regulations of this Chapter, except that where a sidewalk widening is provided pursuant to Section 139-43 (Sidewalk Widening Requirements), any setback required by this Section may be reduced by one foot for each foot by which the sidewalk is widened, provided that no setback shall be less than seven feet in depth.

Where a provision of this Chapter allows a modification to the maximum #building# height, and multiple modifications apply to a #building#, such modifications shall be applied cumulatively.

139-232 - Permitted obstructions

LAST AMENDED
11/23/2021

In all districts, the underlying permitted obstruction regulations shall be modified by this Section.

(a) Solar energy systems

The underlying permitted obstruction regulations shall be modified to permit solar energy systems as a permitted obstruction up to a #lot coverage# of 100 percent of the #lot coverage# of the roof.

(b) Balconies

Unenclosed balconies complying with the provisions of Section 23-132 (Balconies in R6 through R10 Districts) may encroach into any required open area on the #zoning lot#. However, balconies that encroach into #waterfront public access areas# shall be regulated by the provisions of paragraph (a)(1) Section 139-51 (Area-wide Modifications).

(c) Dormers

Above the maximum base height, dormers shall be permitted to encroach into a required setback area, except setback areas adjoining tower portions of #buildings# and setback areas facing #waterfront public access areas#, provided that:

(1) the aggregate width of all dormers does not exceed 50 percent of the width of the #street wall# of the highest #story# entirely below the maximum base height;

(2) the aggregate width of all dormers with a depth exceeding seven feet does not exceed 30 percent of the width of the #street wall# of the highest #story# entirely below the maximum base height.

Such dormers need not decrease in width as the height above the maximum base height increases.

139-233 - Special height and setback regulations in Subdistrict A

LAST AMENDED
11/23/2021

In Subdistrict A, the underlying district regulations shall be modified by the provisions of this Section.

(a) Street wall location

The #street wall# location requirements of paragraph (b) of Section 35-651 (Street wall location) shall apply to all #buildings#.

(b) Base heights and setback requirements

The maximum height of #buildings or other structures# shall be as set forth in Sections 35-652 (Maximum height of buildings and setback regulations) or 35-654 (Modified height and setback regulations for certain Inclusionary Housing buildings or affordable independent residences for seniors), as applicable.

In addition, for all non-#residential# #buildings#, the provisions of paragraph (b)(1) of Section 35-652 shall be modified such that the minimum and maximum base height, maximum #building# height, and maximum number of #stories# for #Quality Housing buildings# with #qualifying ground floors# shall be as set forth in paragraph (b) of Section 23-664 (Modified height and setback regulations for certain Inclusionary Housing buildings or affordable independent residences for seniors).

139-234 - Special height and setback regulations in Subdistrict B

LAST AMENDED
11/23/2021

In Subdistrict B, the underlying district regulations shall be modified by the provisions of this Section.

(a) Street wall location

In #Manufacturing Districts#, 30 percent of the #street wall# shall be located within eight feet of the #street line# and shall extend to at least the minimum base height specified in paragraph (b) of this Section, or the height of the #building#, whichever is lower.

In #Mixed Use Districts#, at least 70 percent of the #aggregate width of street walls# shall be located within eight feet of the #street line# and extend to at least the minimum base height specified in paragraph (b) of this Section or the height of the #building#, whichever is lower. Up to 30 percent of the #aggregate width of street walls# may be recessed beyond eight feet of the #street line#, provided that any such recesses deeper than 10 feet along a #wide street# or 15 feet along a #narrow street# are located within an #outer court#.

(b) Minimum and maximum base heights

In all districts, #street walls# shall rise without setback to a minimum base height set forth in this paragraph (b) or the height of the #building#, whichever is less, and may rise to a maximum base height as set forth in this paragraph (b). In #Manufacturing Districts#, minimum and maximum base heights and maximum heights of #buildings or other structures# shall be as set forth in Table 1 below. In #Mixed Use Districts#, such regulations shall be as set forth in Table 2.

Table 1

MINIMUM BASE HEIGHT, MAXIMUM BASE HEIGHT, AND MAXIMUM BUILDING HEIGHT – FOR M1-4 DISTRICTS

(in feet)

	Minimum base height	Maximum base height	Maximum #building# height
in Subarea B1	15	95	115
in Subarea B2	15	65	85

Table 2

MINIMUM BASE HEIGHT, MAXIMUM BASE HEIGHT, AND MAXIMUM BUILDING HEIGHT – FOR MIXED USE DISTRICTS

(in feet)

	Minimum base height	Maximum base height	Maximum #building# height
M1-4/R6B	30	45	55
M1-4/R6A	40	65	85
M1-4/R7A	40	75	95
M1-4/R7X	60	105	145

For #zoning lots# with a #lot area# greater than or equal to 20,000 square feet, and located in a #Manufacturing District#, a #building# containing non-#residential uses# may exceed the maximum #building# heights established in Table 1 by 30 feet.

For #zoning lots# adjoining the portion of Degraw Street located between Nevins Street and Third Avenue, the heights listed in Table 2 are modified so that within 100 feet of Degraw Street, the maximum base height is 95 feet, and the maximum #building# height is 125 feet.

(c) Setback requirements

At a height not lower than the minimum base height or higher than the maximum base height, a setback shall be provided which complies with the requirements of paragraph (c) of Section 23-662.

139-235 - Special height and setback regulations in Subdistrict C

LAST AMENDED
11/23/2021

(a) Street wall location

At least 70 percent of the #aggregate width of street walls# shall be located within eight feet of the #street line# and shall extend to at least the minimum base height specified in paragraph (b) of this

Section, or the height of the #building#, whichever is lower. Up to 30 percent of the #aggregate width of street walls# may be recessed beyond eight feet of the #street line#, provided that any such recesses deeper than 10 feet along a #wide street# or 15 feet along a #narrow street# are located within an #outer court#. However, no #street wall# location requirement shall apply to the #street walls# facing a #shore public walkway#.

(b) Minimum and maximum base heights

Except as otherwise specified in this paragraph (b), #street walls# shall rise without setback to a minimum base height of 40 feet or the height of the #building#, whichever is less, and may rise to a maximum base height as set forth in this paragraph (b). However, no minimum base height shall be required for #street walls# facing a #shore public walkway#.

(1) Along Bond Street, the minimum base height shall be 30 feet, and the maximum base height shall be 55 feet. No portion of a #building# located within 65 feet of Bond Street may rise above a height of 65 feet.

(2) Along Union Street, between Nevins Street and the Gowanus Canal, the maximum base height shall be 85 feet.

(3) Along Degraw Street, between Nevins Street and the Gowanus Canal, the maximum base height shall be 85 feet.

(4) Along all other #streets#, as well as along the Gowanus Canal, the maximum base height shall be 65 feet.

(c) Setback requirements

At a height not lower than the minimum base height or higher than the maximum base height, a setback with a minimum depth of 15 feet shall be provided. Such setback shall also comply with the requirements of paragraph (c) of Section 23-662 (Maximum height of buildings and setback regulations).

(d) Tower regulations

Where #waterfront public access areas# are considered #streets#, such #streets# shall be considered the boundaries of #blocks# for the purposes of this paragraph.

(1) Tower location

Any portion of a #building# located above a height of 85 feet shall be considered a “tower”. No portion of a tower may be located:

(i) within 30 feet of the #street line# of Nevins Street;

(ii) within 65 feet of Bond Street;

(iii) for #buildings# with only one tower portion, south of the centerline of the #block#; or

(iv) within 30 feet of a #waterfront yard#.

However, for #zoning lots# located south of Carroll Street, any tower may be located south of the centerline of the #block#, and within 30 feet of the #waterfront yard# adjoining the First Street Basin, provided such tower portion is located at least 10 feet from the #waterfront yard# adjoining the First Street Basin.

(2) Tower width

The #street wall# of any tower facing a #shore public walkway# shall not exceed 100 feet in width. Where multiple towers are provided, the combined #street wall# width of all such towers shall not exceed 130 feet.

However, for #zoning lots# located south of Carroll Street, the combined #street wall# width of all towers located west of the required #visual corridor# shall not exceed 150 feet.

(3) Tower coverage

Above a height of 175 feet, any tower shall set back such that it occupies a #lot coverage# no greater than 80 percent of the #story# located immediately below.

(4) Tower height

The maximum height of a tower shall be 225 feet.

(5) Regulations for multiple towers

For #buildings# with two tower portions, there shall be a difference in height between such towers of at least 50 feet. The taller of the two towers shall be located north of the centerline of the #block#, except that:

(i) for #zoning lots# located south of Carroll Street, the taller of the two towers shall be located west of the required #visual corridor#. The shorter of the two towers shall be located east of the required #visual corridor#, and no less than 65 feet from Carroll Street; and

(ii) for the #zoning lot# adjoining the intersection of Degraw Street and Nevins Street, for any #building# located north of Sackett Street, the shorter of the two towers shall be located north of the centerline of the #block#, and shall not exceed a height of 125 feet.

139-236 - Special height and setback regulations in Subdistrict D

LAST AMENDED
11/23/2021

(a) Street wall location

At least 70 percent of the #aggregate width of street walls# shall be located within eight feet of the #street line# and extend to at least the minimum base height specified in paragraph (b) of this Section, or the height of the #building#, whichever is lower. Up to 30 percent of the #aggregate width of street walls# may be recessed beyond eight feet of the #street line#, provided that any such recesses deeper than 10 feet along a #wide street# or 15 feet along a #narrow street# are located within an #outer court#. However, no #street wall# location requirement shall apply to the #street walls# facing a #shore public walkway#.

(b) Minimum and maximum base heights

For #zoning lots# in Subareas D1 through D6, #street walls# shall rise without setback to a minimum base height of 40 feet or the height of the #building#, whichever is less, and may rise to a maximum base height as set forth in the map in this paragraph (b). However, this requirement shall not apply to the #aggregate width of street walls# facing a #shore public walkway#.

(c) Setback requirements

At a height not lower than the minimum base height or higher than the maximum base height, setbacks shall be provided with a minimum depth as set forth in the map in this paragraph (c).

Such setbacks shall also comply with the provisions of paragraph (c) of Section 23-662 (Maximum height of buildings and setback regulations).

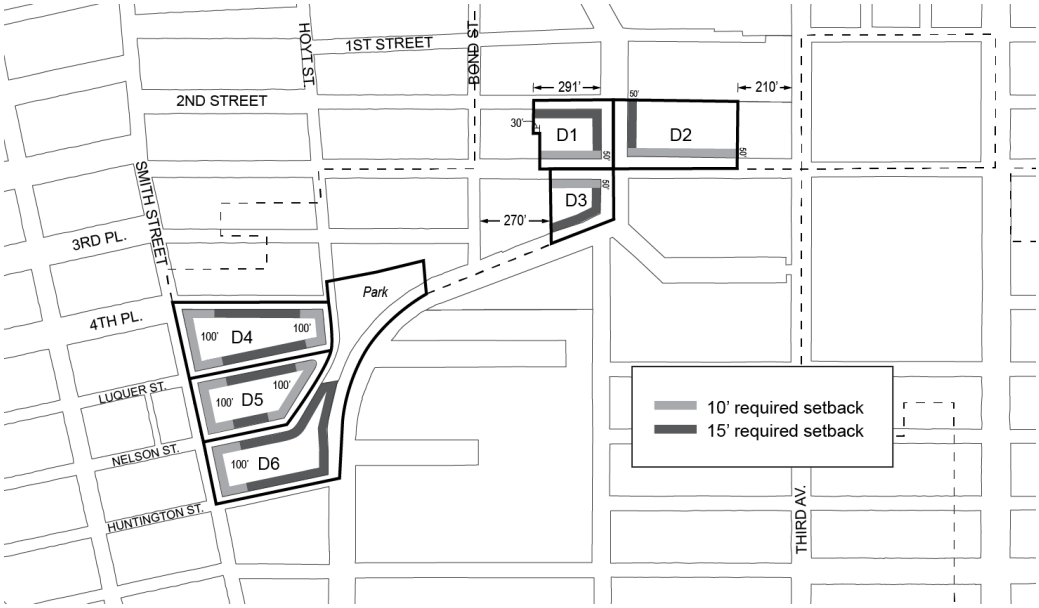

(d) Transition heights

Any portion of a #building# located above the setback required by paragraph (c) of this Section shall be permitted to rise to a maximum "transition height" as set forth in this paragraph (d). Any portion of a #building# located above the maximum transition height shall be considered a "tower" and shall comply with the provisions of paragraph (e) of this Section. Except as otherwise set forth in the map in this paragraph (d), such maximum transition height shall be 85 feet.

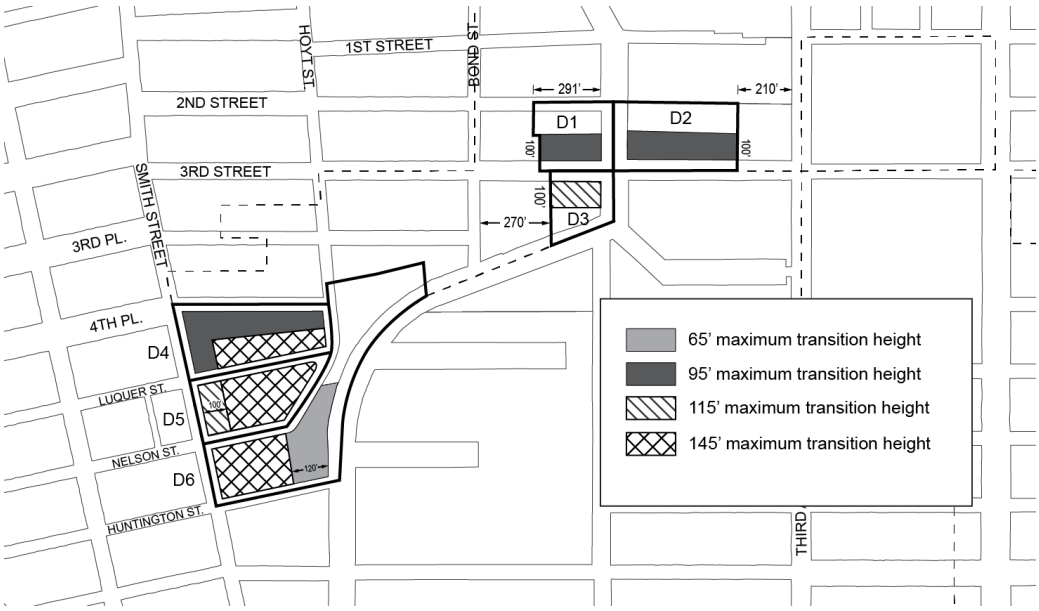

(e) Tower regulations

(1) Tower location

Any portion of a #building# located above the maximum transition height set forth in paragraph (d) shall be considered a "tower". No portion of a tower may be located:

(i) in Subarea D4, within 150 feet of Smith Street or within 150 feet of Hoyt Street;

(ii) in Subarea D5, within 80 feet of Smith Street or within 200 feet of Smith Street north of the mid-#block# line; or

(iii) within 30 feet of a #waterfront yard#.

(2) Tower width

The #street wall# of any tower facing a #shore public walkway# shall not exceed 100 feet in width. Where multiple towers are provided, the combined #street wall# width of all such towers shall not exceed 130 feet.

However, in Subarea D4, where multiple towers are provided, the combined #street wall# width of all such towers shall not exceed 170 feet.

(3) Tower coverage

In Subareas D1, D2, and D3, above a height of 175 feet, any tower shall set back such that it occupies a #lot coverage# no greater than 80 percent of the #story# located immediately below.

In Subareas D5 and D6, the portion of any tower containing the top four #stories# of such tower shall set back such that it occupies a # lot coverage# no greater than 80 percent of the #story# located immediately below.

(4) Tower height

Except as otherwise specified in this paragraph (e)(4), the maximum height of a tower shall be 225 feet.

(i) In Subarea D4, towers shall be permitted to rise to a height of 285 feet.

(ii) In Subarea D5, towers shall be permitted to rise to a height of 245 feet.

(iii) In Subarea D6, towers shall be permitted to rise to a height of 305 feet.

(5) Regulations for multiple towers

(i) In Subareas D1 and D2, no more than two towers shall be permitted on a #zoning lot#.

(ii) In Subareas D4 and D5, no more than two towers shall be permitted in each subarea.

(iii) In Subareas D3 and D6, no more than one tower shall be permitted in the subarea.

(iv) Wherever two towers are provided on the same #zoning lot#, there shall be a difference in height between such towers of at least 50 feet.

In addition, in Subarea D1, the taller of the two towers shall be located within 100 feet of Third Street.

139-237 - Special street wall articulation requirements

LAST AMENDED
11/23/2021

In all subdistricts, for #street walls# with widths exceeding 200 feet, a minimum of 20 percent and no more than 50 percent of the surface area of such #street walls# above the level of the second #story#, or a height of 30 feet, whichever is lower, shall either recess or project a minimum of three feet from the remaining surface of the #street wall#. Any such recess or projection shall be considered a permitted obstruction into a required setback, and the depth of such recess or projection shall not exceed three feet.

In addition, in Subdistrict D, the underlying dormer provisions of paragraph (c) of Section 23-621 shall be modified for portions of #buildings# facing Third Street, so that above the maximum base height, dormers shall be permitted only within 75 feet of the intersection of two #streets#.

139-238 - Special height regulations for zoning lots containing schools

LAST AMENDED
11/23/2021

In Subdistrict C, and in Subareas D1, D2, and D3, for #zoning lots# containing #schools# regulated by Section 139-214 (Special floor area provisions for zoning lots containing schools), the maximum tower height specified by the regulations in this Section, inclusive, may be increased as-of-right by 40 feet. This allowance may be further modified by the provisions of Section 139-47 (Authorization for sites containing schools).

139-30 - SPECIAL PARKING REGULATIONS

LAST AMENDED
11/23/2021

In Subdistricts A, B, C, and D, the underlying parking and loading regulations shall be modified by the provisions of this Section. On #waterfront blocks#, the provisions of Section 62-40 shall not apply. In Subdistrict E, the underlying regulations shall apply.

139-31 - Special Accessory Off-street Parking Regulations

LAST AMENDED11/23/2021

139-311 - Reduction of parking requirements for residences

LAST AMENDED
11/23/2021

In all districts, for the purposes of applying the provisions of Sections 36-33 (Requirements Where Group Parking Facilities Are Provided) and 123-72 (Residential and Community Facility Uses), the provisions of Section 25-23 (Requirements Where Group Parking Facilities Are Provided) shall be modified to require that #accessory# off-street parking spaces be provided for at least 20 percent of #residences# on a #zoning lot#.

For the purposes of applying waivers, the provisions of Section 25-26 (Waiver of Requirements for Small Number of Spaces) shall be modified so that the maximum number of #accessory# off-street parking spaces for which requirements are waived is 20 spaces.

Notwithstanding the above, in Subarea D4, and in Subarea D5 north of the mid-#block# line, no #accessory# off-street parking spaces for #residences# shall be required.

139-312 - Elimination of parking requirements for non-residential uses

LAST AMENDED
11/23/2021

In all districts, no #accessory# off-street parking spaces shall be required for #manufacturing#, #commercial#, or #community facility uses#.

139-313 - Off-site parking facilities

LAST AMENDED
11/23/2021

For #residences# in #Commercial# and #Mixed Use Districts#, the provisions of Sections 25-51 and 36-42 (Off-site Spaces for Residences) shall be modified to allow the #zoning lot# containing required #accessory# off-street parking spaces for #residences# to be located in any zoning district, as well as anywhere within the #Special Gowanus Mixed Use District#.

139-314 - Joint facilities

LAST AMENDED
11/23/2021

For #residences# in #Commercial# and #Mixed Use Districts#, the provisions of Sections 25-541 and 36-441 (Joint facilities) shall not apply. In lieu thereof, the provisions of this Section shall apply.

Required #accessory# off-street parking spaces may be provided in facilities designed to serve jointly two or more #buildings# or #zoning lots#, provided that the number of spaces in such joint facilities shall be not less than that required for the combined number of #dwelling units# in such #buildings# or #zoning lots#, and provided that the design and layout of such joint facilities meets the standards of adequacy set forth in regulations promulgated by the Commissioner of Buildings.

139-315 - Use of parking facilities for car sharing vehicles

LAST AMENDED
11/23/2021

The underlying regulations regarding the occupation of #accessory# or required off-street parking spaces by #car sharing vehicles# shall modified so that, in all districts, the number of spaces occupied by #car sharing vehicles# shall not exceed 20 percent of all spaces in a #group parking facility#.

139-316 - Use of parking facilities for public parking

LAST AMENDED
11/23/2021

All #accessory# off-street parking spaces may be made available for public use. However, parking spaces #accessory# to #residences# shall be made available to the occupant of a #residence# to which it is #accessory# within 30 days after written request is made to the landlord.

139-32 - Special Permitted Off-street Parking Regulations

LAST AMENDED
11/23/2021

For portions of an #automated parking facility#, as that term is defined in Section 13-02, each tray upon which a vehicle is stored shall be considered one parking space, regardless of its size. In addition, at a height in excess of 23 feet above #curb level# each parking tray shall be considered #floor area# in an amount of 153 square feet or the size of such lifted tray, whichever is greater.

139-33 - Special Loading Regulations

LAST AMENDED
11/23/2021

In all districts, the loading regulations of an M1-5 District shall apply, and shall be further modified as follows:

(a) the requirements of Section 44-50 (OFF-STREET LOADING REGULATIONS), inclusive, shall not apply to changes of #uses#;

(b) the provisions of Section 44-53 (Special Provisions for a Single Zoning Lot With Uses Subject to Different Loading Requirements), and Sections 36-64 and 44-54 (Wholesale, Manufacturing, or Storage Uses Combined With Other Uses), shall not apply; and

(c) the minimum length requirements for loading berths #accessory# to #commercial uses#, other than funeral establishments, set forth in Section 44-581 (Size of required loading berths) shall be increased to 37 feet.

139-34 - Special Curb Cut Regulations

LAST AMENDED
11/23/2021

For #zoning lots# existing on or after November 23, 2021, with frontage along both a #primary street frontage# and a #secondary street frontage#, as set forth in Section 139-41 (Ground Floor Level Requirements), curb cuts accessing off-street parking spaces and loading berths shall not be permitted along the #primary street frontage#. In addition, no curb cut shall be permitted within 40 feet of a #waterfront public access area#.

Curb cuts prohibited by this Section may be authorized by the City Planning Commission provided the Commission finds that a curb cut at such a location:

(a) is not hazardous to traffic safety;

(b) will not create or contribute to serious traffic congestion, or unduly inhibit vehicular movement;

(c) will not adversely affect pedestrian movement;

(d) will not interfere with the efficient functioning of bus lanes, specially designated streets or public transit facilities; and

(e) will not be inconsistent with the character of the existing streetscape.

The Commission may prescribe appropriate conditions and safeguards to minimize adverse effects on the character of the surrounding area.

139-40 - DISTRICT PLAN ELEMENTS

LAST AMENDED
11/23/2021

In all Subdistricts, the provisions of this Section shall apply to all #zoning lots#, as specified below.

139-41 - Ground Floor Level Requirements

LAST AMENDED
11/23/2021

For the purposes of applying the special #ground floor level# streetscape provisions set forth in Section 37-30 to this Chapter, the portion of a #ground floor level street# frontage considered a #primary street frontage# shall be as shown on Map 3 (Ground Floor Use Requirements) in Appendix A of this Chapter. A #ground floor level# #street# frontage along any other #street# shall be considered a #secondary street frontage#.

The provisions of this Section shall apply to #developments# or #ground floor level# #enlargements#.

(a) Along #primary street frontages#

(1) Type 1 #primary street frontages#

For #buildings#, or portions thereof, with Type 1 #primary street frontage#, #uses# on the #ground floor level#, to the minimum depth set forth in Section 37-32 (Ground Floor Depth Requirements for Certain Uses), shall be limited to #Gowanus retail and entertainment uses#, except for Type 1 lobbies and entrances and exits to #accessory# parking spaces provided in accordance with the applicable provisions of Section 37-33 (Maximum Width of Certain Uses). Group parking facilities located on the #ground floor level# shall be wrapped by #floor area# in accordance with the provisions of paragraph (a) of Section 37-35 (Parking Wrap and Screening Requirements). #Ground floor level# #street walls# shall be glazed in accordance with the provisions set forth in Section 37-34 (Minimum Transparency Requirements).

(2) Type 2 #primary street frontages#

For #buildings#, or portions thereof, with Type 2 #primary street frontage#, #uses# on the #ground floor level#, to the minimum depth set forth in Section 37-32, shall be limited to non-#residential uses#, except for Type 1 lobbies and entrances and exits to #accessory# parking spaces provided in accordance with the applicable provisions of Section 37-33. #Group parking facilities# located on the #ground floor level# shall be wrapped by #floor area# in accordance with the provisions of paragraph (a) of Section 37-35. #Ground floor level street walls# shall be glazed in accordance with the provisions set forth in Section 37-34.

(b) Along #secondary street frontages#

For #buildings#, or portions thereof, with #secondary street frontage#, all #uses# permitted by the underlying district shall be permitted on the #ground floor level#, provided that any off-street parking spaces on the #ground floor level# shall be wrapped or screened in accordance with Section 37-35. Entrances and exits to accessory parking facilities shall be subject to the provisions of paragraph (b) of Section 37-33.

(c) For blank walls

In all districts, any #street wall# width exceeding 50 feet with no transparent elements on the #ground floor level# shall provide visual mitigation elements in accordance with the provisions of Section 37-36 (Special Requirements for Blank Walls).

139-42 - Street Tree Requirements

LAST AMENDED
11/23/2021

In all districts, all #developments#, or #enlargements# that increase the #floor area# on a #zoning lot# by 20 percent or more, shall provide #street# trees in accordance with Section 26-41 (Street Tree Planting).

In addition, for #zoning lots# with over 100 feet of street frontage, wherever two required #street# tree pits will be separated by less than 25 feet, such tree pits shall be combined and designed as a single continuous tree pit.

139-43 - Sidewalk Widening Requirements

LAST AMENDED
11/23/2021

For #developments# along the portions of #streets# designated on Map 4 (Sidewalk Widening Lines) in Appendix A of this Chapter, a sidewalk widening shall be required, providing a total sidewalk width of:

(a) 17 feet along Third Avenue;

(b) 15 feet along Nevins Street; and

(c) 13 feet along Fifth Street.

The total sidewalk width shall be measured perpendicular from the #street line#. Such sidewalk shall be improved to Department of Transportation standards and shall be provided at the same level as the adjoining public sidewalk and be accessible to the public at all times.

Awnings and canopies shall be considered permitted obstructions within a sidewalk widening provided that no structural posts or supports may be located within any portion of the sidewalk or such widening.

139-44 - Bridge Connection Requirements

LAST AMENDED
11/23/2021

For all #zoning lots# abutting bridge structures supporting #streets# which cross the Gowanus Canal at Union Street, Carroll Street, and Third Street, and are subject to #waterfront public access area# requirements, such #waterfront public access area# shall be designed to provide pedestrian connection to the #street# adjacent to the terminus of the bridge structure.

The requirements of this Section may be waived where the Commissioner of the Department of Buildings determines, in consultation with the Department of Transportation, that such a pedestrian connection to the #street# would result in a hazard to pedestrian or traffic safety.

139-45 - Waterfront Public Access Area Requirements

LAST AMENDED
11/23/2021

For all #waterfront zoning lots#, the exemptions from #waterfront public access area# requirements listed in paragraph (a) of Section 62-52 shall not apply.

(a) Reduced requirement for certain manufacturing uses

For #zoning lots# with #developments#, #enlargements#, or #conversions# comprised of #predominantly# Use Group 18 #uses#, as listed in Section 42-15, the reduced design requirements of Section 62-58 (Requirements for Water-Dependent Uses and Other Developments) shall apply to #waterfront public access areas#.

(b) Authorization for incompatible uses

For #zoning lots# comprised #predominantly# of Use Group 16, 17, or 18 #uses#, the City Planning Commission may authorize the waiver of #waterfront public access area# requirements, provided the Commission finds that:

(1) such #uses# produce objectionable effects on its surroundings such that the #uses# are incompatible with a waterfront public access requirement; or

(2) such #uses# have demonstrable operational requirements which would be incompatible with waterfront public access requirements; and

(3) such waiver is the least necessary to accommodate the proposed #uses#.

Such waivers shall be in effect for as long as the proposed #use# remains on the #zoning lot#. Upon #development# of the #zoning lot# following cessation of the #use# for a period of more than two years, full compliance with #waterfront public access area# requirements, as may be modified by future approvals, is required.

139-46 - Certification for Transit Improvements

LAST AMENDED
11/23/2021

(a) In #Commercial Districts# with a residential equivalent of an R9 District, for #developments# on #zoning lots# that are located within 500 feet of the Union Street subway station, the Chairperson of the City Planning Commission may, by certification to the Commissioner of Buildings, allow a #development# to:

(1) receive a #floor area# bonus not to exceed 20 percent of the maximum #floor area ratio# permitted by Section 139-211 (Basic floor area regulations); and

(2) further modify additional height permitted pursuant to paragraph (c) of Section 66-234 (Special height and setback modifications) provided the total combined modification does not exceed 30 feet;

where a major improvement to the Union Street subway station consisting of one new off-street station entrance with an accessible route for persons with physical disabilities between two levels servicing the southbound platform is provided.

(b) Prior to issuing such a certification, the following requirements shall be met.

(1) To the extent required by the #transit agency#, the applicant shall execute an agreement, setting forth the obligations of the owner, its successors and assigns, to establish a process for design development and a preliminary construction schedule for the proposed improvement; construct the proposed improvement; establish a program for maintenance and capital maintenance; and establish that such improvements shall be accessible to the public during the hours of operation of the station or as otherwise approved by the #transit agency#. Where the #transit agency# deems necessary, such executed agreement shall set forth obligations of the applicant to provide a performance bond or other security for completion of the improvement in a form acceptable to the #transit agency#.

(2) Prior to obtaining a foundation permit or building permit from the Department of Buildings, a written declaration of restrictions, in a form acceptable to the Chairperson of the City Planning Commission, containing complete drawings of the improvement and setting forth the obligations of the owner as agreed upon with the #transit agency# pursuant to the requirements of paragraph (b)(1) of this Section, shall be recorded against such property in the Borough Office of the City Register of the City of New York. Proof of recordation of the declaration of restrictions shall be submitted in a form acceptable to the Department of City Planning.

(3) No temporary certificate of occupancy shall be granted by the Department of Buildings for the portion of the #building# utilizing bonus #floor area# authorized pursuant to the provisions of this Section until the required improvements have been substantially completed, as determined by the Chairperson, acting in consultation with the #transit agency#, where applicable, and such improvements are usable by the public. Such portion of the #building# utilizing bonus #floor area# shall be designated by the Commission in drawings included in the declaration of restrictions filed pursuant to this paragraph.

No permanent certificate of occupancy shall be granted by the Department of Buildings for the portion of the #building# utilizing bonus #floor area# until all improvements have been completed in accordance with the approved plans, as determined by the Chairperson, acting in consultation with the #transit agency#, where applicable.

139-47 - Authorization for sites containing schools

LAST AMENDED
11/23/2021

For #zoning lots# containing #schools# regulated by the provisions of Section 139-214 (Special floor area provisions for zoning lots containing schools), the City Planning Commission may authorize the modification of any #bulk# regulation, including the amount of floor space exempted from the definition of #floor area# by Section 139-214, in order to better accommodate a #school# upon such #zoning lot#.

(a) Conditions

(1) No modification to the maximum #building# height shall exceed 30 feet; and

(2) No modification to the amount of floor space exempted from the definition of #floor area# shall exceed an additional 60,000 square feet of floor space.

(b) Findings

In determining such modifications, the Commission shall find:

(1) such modification is the least modification required to achieve the purpose for which it is granted;

(2) the proposed modification does not impair the essential character of the surrounding area; and

(3) the proposed modification will not have adverse effects upon light, air, and privacy of adjacent properties and of any existing #buildings# on the #zoning lot#.

Applications for authorizations shall be referred to the affected Community Board for a period of at least 30 days for comment. The Commission shall grant in whole or in part or deny the application within 60 days of the completion of the Community Board review period.

139-48 - Authorization for Large Mixed-use Sites

LAST AMENDED
11/23/2021

In Subdistrict B, for #developments# on #zoning lots# located in a #Mixed-Use District#, on a #zoning lot# greater than 40,000 square feet in #lot area#, the City Planning Commission may authorize the modifications set forth in paragraph (a) of this Section, provided that the conditions in paragraph (b) and findings in paragraph (c) are met.

(a) Modifications

The Commission may modify the following regulations:

(1) the #use# regulations of this Chapter, limited to ground floor #use# regulations and supplemental #use# regulations;

(2) the #bulk# regulations of this Chapter, except #floor area ratio# regulations, provided that any modifications to height and setback regulations do not exceed the heights permitted in an M1-4 District as set forth in Section 43-43; and

(3) the parking regulations related to the number of required #accessory# off-street parking spaces and the location and spacing of curb cuts.

(b) Conditions

As conditions for the granting of an authorization pursuant to this Section:

(1) the #development# shall result in a mix of #uses# on the #zoning lot# where the predominant amount of #floor area# is associated with non-#residential# #uses#; or

(2) the #development# shall:

(i) result in a mix of #uses# on the #zoning lot# where at least 20 percent of the #floor area# is associated with #Gowanus mix uses#;

(ii) not exceed 300 feet in height; and

(iii) be located on a #zoning lot# where existing #buildings# will occupy at least 20 percent of the #lot coverage#.

(c) Findings

In order to grant such authorization, the Commission shall find that:

(1) where modifying #bulk# regulations, such modifications shall result in a superior configuration of non-#residential# #uses# on the #zoning lot# than would be feasible by applying the #Special Gowanus Mixed Use District# regulations;

(2) where modifying ground floor #use# regulations, the advantages of an off-street loading and access outweigh the disadvantages incurred by the interruption of retail continuity; and

(3) where modifying supplemental #use# and parking regulations, that such modifications would present a limited interruption and would not create serious vehicular traffic congestion that would adversely affect the surrounding area.

Upon completion of the #development#, the #zoning lot# shall remain in compliance with the conditions set forth in paragraph (b) of this Section. Such requirements shall be reflected in a notice of restrictions recorded against all tax lots comprising such #zoning lot#, and a copy of such notice shall be provided to the Department of Buildings.

The Commission may prescribe appropriate conditions and safeguards to minimize adverse effects on the character of the surrounding area.

139-50 - GOWANUS CANAL WATERFRONT ACCESS PLAN

LAST AMENDED
11/23/2021

The provisions of Article VI, Chapter 2 (Special Regulations Applying in the Waterfront Area), shall apply, except as superseded, supplemented or modified by the provisions of this Section, inclusive.

The boundaries of the area comprising the Gowanus Canal Waterfront Access Plan, and the location of certain features mandated or permitted by the Plan, are shown on the maps in Appendix B of this Chapter.

The waterfront access plan has been divided into Parcels as shown on Map 1 of Appendix B of this Chapter, consisting of tax #blocks# and lots existing on September 22, 2021, as follows:

Parcel 1: Block 417, Lots 1, 10, 14, 21

Parcel 2: Block 424, Lots 1, 20

Parcel 3: Block 431, Lots 1, 2, 5, 6, 7, 12, 17, 43

Parcel 4: Block 425, Lot 1

Block 432, Lots 15, 25, 7501

Parcel 5: Block 439, Lot 1

Parcel 6a: Block 438, Lot 7

Parcel 6b: Block 438, Lots 1, 2, 3

Block 445, Lots 1, 7, 8, 11, 20, 50

Parcel 7: Block 452, Lots 1, 5, 19

Block 458, Lot 1

Parcel 8a: Block 453, Lots 1, 21

Parcel 8b: Block 453, Lot 26

Parcel 8c: Block 453, Lots 30, 31, 32, 33, 35, 36, 38, 39, 41, 42, 43, 44, 44, 45, 46, 48, 49, 50, 51

Parcel 8d: Block 453, Lot 54

Parcel 9: Block 967, Lot 1

Parcel 10: Block 967, Lot 24

Parcel 11: Block 972, Lots 1, 43, 58

Parcel 12a: Block 462, Lots 12, 14

Parcel 12b: Block 462, Lots 6, 8, 9, 42, 44

Parcel 12c: Block 462, Lots 1, 3, 4, 5, 50, 51

Parcel 13: Block 466, Lot 19

Parcel 14a: Block 466, Lots 17, 60

Parcel 14b: Block 466: Lot 1

Parcel 14c: Block 466, Lot 46

Parcel 15a: Block 471, Lot 125

Parcel 15b: Block 471, Lot 104, 110, 114, 116

Parcel 16: Block 471, Lots 1,100

Parcel 17: Block 471, Lot 200

For the purposes of this Section, inclusive, the definition of #development# shall be as set forth in Section 62-11 (Definitions).

139-51 - Area-wide Modifications

LAST AMENDED
11/23/2021

The provisions of Article VI, Chapter 2 (Special Regulations Applying in the Waterfront Area) shall be modified in the area comprising the Gowanus Canal Waterfront Access Plan by the provisions of this Section.

(a) All #waterfront public access areas#

(1) Balconies

Balconies complying with the provisions of Section 23-132 (Balconies in R6 through R10 Districts) shall be permitted obstructions in #waterfront public access areas#, provided the depth of obstruction is limited to four feet, and provided they are located at or above the floor level of the third #story# above grade of the #building#.

(2) Sun control devices

Awnings and other sun control devices shall be permitted obstructions in #waterfront public access areas#. However, when located at a level higher than the first #story#, excluding a #basement#, all such devices:

(i) shall be limited to a maximum projection from a #building# wall of 2 feet, 6 inches; and

(ii) shall have solid surfaces that, in aggregate, cover an area no more than 30 percent of the area of the #building# wall (as viewed in elevation) from which they project.

(3) Kiosks

Where a #supplemental public access area# exceeds 15,000 square feet, a kiosk shall be a permitted obstruction in such #supplemental public access area# with an area up to 400 square feet, including roofed areas.

(b) #Shore public walkways#

(1) Width of circulation paths

#Shore public walkways# shall provide a required circulation path with a minimum clear width of 10 feet. Secondary paths, where provided, shall have a minimum clear width of at least 4 feet, 6 inches.

(2) Level of circulation paths

At least 80 percent of a required circulation path shall be located at a level no less than six feet above the #shoreline#. However, up to 40 percent of such required circulation path may be provided below such level when providing access to a "get-down" located no more than two feet above the level of the #shoreline#.

(3) Access to circulation paths

The provisions of paragraph (a)(1) of Section 62-62 (Design Requirements for Shore Public Walkways and Supplemental Public Access Areas) shall apply, except that where a #shore public walkway# is on a #zoning lot# that is adjacent to a #zoning lot# which has not been improved with a #shore public walkway#, the portion of the circulation path that terminates at the common #zoning# #lot line# may be located within 40 feet of the shoreline.

In addition, for #zoning lots# adjoining #streets# containing bridge structures, the required connection of circulation paths to such a #street# may be waived by certification by the Department of Transportation, pursuant to Section 139-44 (Bridge Connection Requirements).

(4) Grading

The provisions of paragraph (d)(2) of Section 62-61 (General Provisions Applying to Waterfront Public Access Areas) shall be modified so that within five feet of the edge of any planting area, the grade level of such planting area shall be no more than 36 inches higher or lower than the adjoining level of the pedestrian circulation path.

(c) #Supplemental public access areas#

(1) Required Area

The provisions of Section 62-57 (Requirements for Supplemental Public Access Areas) are modified so that, in #mixed use districts#, a total #waterfront public access area# equivalent to 20 percent of the #lot area# is required.

(2) Lawns

The provisions of paragraph (c)(1) of Section 62-62 shall be modified so that a lawn shall only be required where a #supplemental public access area# is greater than 15,000 square feet. The Commission may authorize use of artificial turf within a lawn pursuant to Section 62-822 (Modification of waterfront public access areas and visual corridor requirements).

Where required, a lawn may be substituted for an athletic field of equivalent size, which may be unplanted, and shall be suitable for active recreational use.

(3) Comfort stations

Where a publicly accessible comfort station is provided as part of a #development#, the amount of #supplemental public access area# may be reduced by an amount equal to the size of the

comfort station, provided that:

(i) the comfort station has an entrance fronting upon a #waterfront public access area#; and

(ii) a restrictive declaration, acceptable to the Department of City Planning and Department of Parks and Recreation, shall be executed and recorded, binding the owners, successors and assigns to provide and maintain such comfort station for the life of the #development#.

(d) Screening

Wherever a screening buffer is required to be provided, the minimum width of such buffer shall be four feet.

In addition to the waiver allowances of paragraph (c)(2)(iii) of Section 62-62, no screening buffer shall be required along the upland boundary, or portion thereof, which is adjacent to an unenclosed seating area #accessory# to a #Gowanus retail and entertainment use#. Where a screening buffer is so waived, design features shall be utilized to demarcate the #shore public walkway# or #supplemental public access area# from the non-publicly accessible area, which may include, but shall not be limited to, railings, fences, planting boxes, and distinct paving materials.

(e) #Street# treatment

For #streets#, or portions thereof, located within the Gowanus Canal Waterfront Access Plan, the portion of the #street# that is adjacent to a #shore public walkway# shall be improved as upland access, for a depth equivalent to the adjacent #shore public walkway#. This upland access area shall be designed to include, at a minimum, the following design elements:

(1) a foot path with a minimum clear width of ten feet, providing a connection to both the sidewalk located in the #street# as well as to the adjacent #zoning lot#;

(2) eight linear feet of seating complying with Section 62-652 (Seating) for every 30 feet of #shoreline# upon which the #street# fronts; and

(3) planted areas, containing planting or trees complying with Section 62-655 (Planting and trees) and occupying no less than 25 percent of the continuation area.

The provisions of this paragraph (e) shall not apply to portions of #streets# which will be improved pursuant to a site plan approved prior to November 23, 2021.

(f) Bulkheads

Wherever the United States Environmental Protection Agency requires the installation of a bulkhead in a location seaward of the #zoning lot line#, the area located between the #lot line# and bulkhead may be utilized for the purposes of satisfying the #waterfront public access area# requirements of the #zoning lot#. Where the provisions of this paragraph (f) are utilized, the location of the bulkhead shall be considered the #shoreline# for the purposes of providing the required #waterfront public access areas#.

(g) Issuance of foundation permits

Notwithstanding the provisions of Section 62-811 (Waterfront public access and visual corridors), within 18 months of November 23, 2021, a foundation permit may be issued for any #development# within the Waterfront Access Plan, upon certification by the Chairperson of the City Planning Commission to the Department of Buildings or Department of Business Services, as applicable, that:

(1) a remedial action plan has been submitted to the Office of Environmental Remediation or the New York State Department of Environmental Conservation, which includes the #zoning lot# containing the #development#; and

(2) a site plan has been submitted to the Department of City Planning, depicting that the proposed foundation will not conflict with the basic dimensional requirements of any required #waterfront public access area# or #visual corridor#, and, in addition, that the proposed foundation shall not conflict with any of the site-specific provisions below, based on the applicable Parcel number and Type:

(i) Type 1

For #developments# on Parcels 1, 2, 3, and 9, the site plan shall additionally designate all other potential locations where a #supplemental public access area# could be located, including:

(a) adjoining each #street# abutting the #shore public walkway#; and

(b) adjoining the #shore public walkway#.

In addition, for all #developments# on #zoning lots# which are not coterminous with the Parcel boundary, the #waterfront public access area# requirement for the depicted #zoning lot# shall be based on the combined #lot area# of the entire Parcel.

(ii) Type 2

For #developments# on Parcels 4, 5, and 12a, the site plan shall additionally designate any area located landward of the #shore public walkway# as necessary to achieve a 50-foot buffer from the #shoreline#.

(iii) Type 3

For #developments# on Parcels 6a, 6b, 8a, 8b, 8d, 11, 13, 14, 15, and 17, where the #developments# are on #zoning lots# which are not coterminous with the Parcel boundary, the #waterfront public access area# requirement for the depicted #zoning lot# shall be based on the combined #lot area# of the entire Parcel.

An application made pursuant to this paragraph (g) shall include a survey of the #zoning lot# and additional documentation set forth Section 62-80 (SPECIAL REVIEW PROVISIONS), inclusive. Except for excavation and foundation permits permitted by this paragraph (g), no other building permits shall be issued except pursuant to Section 62-811.

139-52 - Special Public Access Provisions

LAST AMENDED
11/23/2021

The provisions of Sections 62-50 (GENERAL REQUIREMENTS FOR VISUAL CORRIDORS AND WATERFRONT PUBLIC ACCESS AREAS) and 62-60 (DESIGN REQUIREMENTS FOR WATERFRONT PUBLIC ACCESS AREAS) are modified at the following designated locations which are shown on Map 1 in Appendix B of this Chapter.

139-521 - Parcels 4, 5, 13, 14 and 15

LAST AMENDED
11/23/2021

On Parcels 4, 5, 13, 14 and 15, where a #shore public walkway# is required, such #shore public walkway# shall have a minimum width of 30 feet. The required minimum depth of a #waterfront yard# shall be 30 feet.

139-522 - Parcel 8

LAST AMENDED
11/23/2021

On Parcels 8a, 8b, and 8d, where a #shore public walkway# is required, such #shore public walkway# shall have a minimum width of 30 feet, except that for #shore public walkways# adjoining the First Street Basin, the minimum width shall be 20 feet. The required minimum depth of a #waterfront yard# shall be 30 feet, except that for #waterfront yards# adjoining the First Street Basin, the minimum depth shall be 20 feet. An area equal to at least 25 percent of the area of the #shore public walkway# shall be planted, and one linear foot of seating shall be provided for every 125 feet of frontage along the Gowanus Canal.

139-523 - Parcel 12

LAST AMENDED
11/23/2021

On Parcel 12, where a #supplemental public access area# adjoining an #upland connection# or #street# is provided, such #supplemental public access area# shall be permitted to be provided with a maximum width to depth ratio of 3:1, and the longest side shall be permitted to adjoin the #street#.

139-524 - Parcel 14

LAST AMENDED
11/23/2021

On Parcel 14a, a #supplemental public access area# shall be provided along the entire length of the #lot line# adjoining Parcel 13, connecting the #street# to the #shore public walkway#, and shall comply with the design reference standards applicable to a Type 1 #upland connection# set forth in Section 62-64 (Design Requirements for Upland Connections). Such #supplemental public access area# may coincide with a #visual corridor# required pursuant to Section 139-53 (Special Visual Corridor Provisions).

139-525 - Parcel 17

LAST AMENDED
11/23/2021

On Parcel 17, the total #lot area# utilized in the calculation of required #supplemental public access area# shall include all #zoning lot# portions located within Parcel 17, including portions of a #zoning lot# located within a #street#.

139-53 - Special Visual Corridor Provisions

LAST AMENDED
11/23/2021

The provisions of Section 62-512 (Dimensions of visual corridors) shall be modified by the provisions of this Section.

The lowest level of a #visual corridor# shall be determined by establishing a plane connecting the two points along the #street lines# from which the #visual corridor# emanates at an elevation five feet above #curb level# with the two points where the prolonged #street lines# intersect the #shoreline#, stabilized natural shore, bulkhead, upland edge of a #waterfront yard# raised pursuant to the provisions of paragraph (b) of Section 62-332 (Rear yards and waterfront yards), or the #base plane# of a #pier# or #platform#, whichever intersection occurs first. Such plane shall then continue horizontally seaward from the line of intersection. #Visual corridors# that are not prolongations of mapped #streets# shall be determined by establishing a plane connecting an elevation five feet above #curb level# at the two points along the #lot line# from which the #visual corridor# emanates with the two points of intersection at the #shoreline#, stabilized natural shore, bulkhead, upland edge of a #waterfront yard# raised pursuant to the provisions of paragraph (b) of Section 62-332, or the #base plane# of a #pier# or #platform#, whichever intersection occurs first.

139-54 - Special Design Standards

LAST AMENDED
11/23/2021

The design requirements of Section 62-60 (DESIGN REQUIREMENTS FOR WATERFRONT PUBLIC ACCESS AREAS) are modified by the provisions of this Section, inclusive.

139-541 - Special design standards for guardrails

LAST AMENDED
11/23/2021

In addition to the provisions of paragraph (a) of Section 62-651 (Guardrails, gates and other protective barriers), guardrails shall comply with the illustrations provided in either paragraph (a) or (b) of this Section, or shall be of a comparable design which is the minimum modification needed. Where modification is sought, it shall be deemed suitable by the Chairperson of the City Planning Commission in consultation with the Department of Parks and Recreation (DPR).

(a) Option 1: vertical bar guardrail

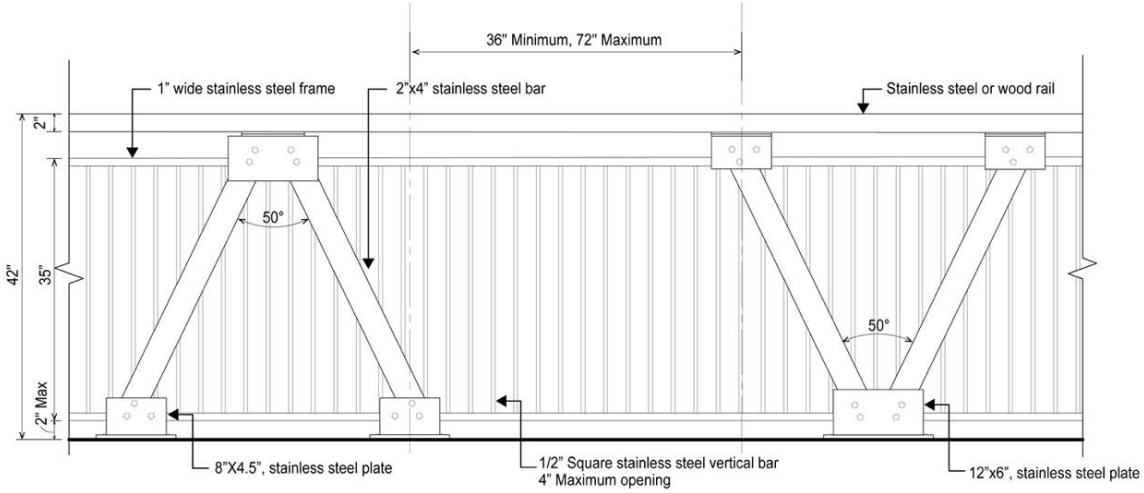

GUARDRAIL (TYPICAL)
Front Elevation

GUARDRAIL TERMINATION
Front Elevation

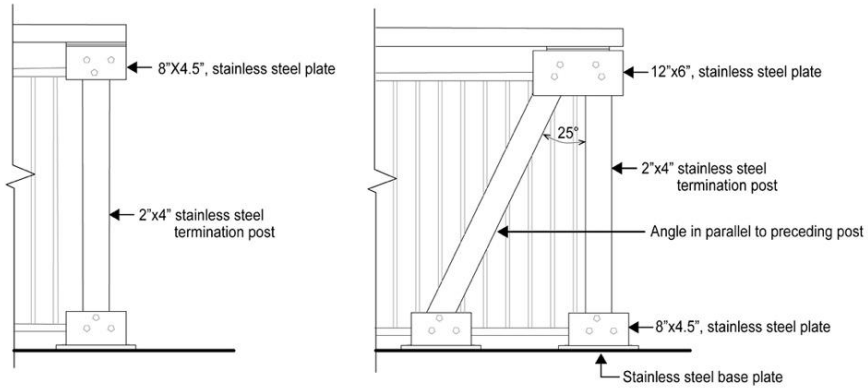

Alternate 1 Alternate 2

GUARDRAIL (TYPICAL)
Side Elevation

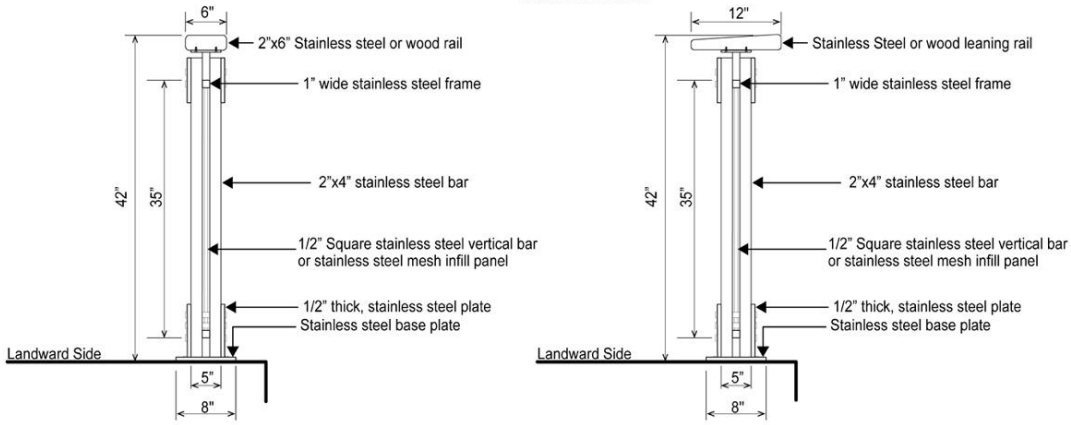

Alternate 1 (top rail) Alternate 2 (leaning rail)

(b) Option 2: mesh guardrail

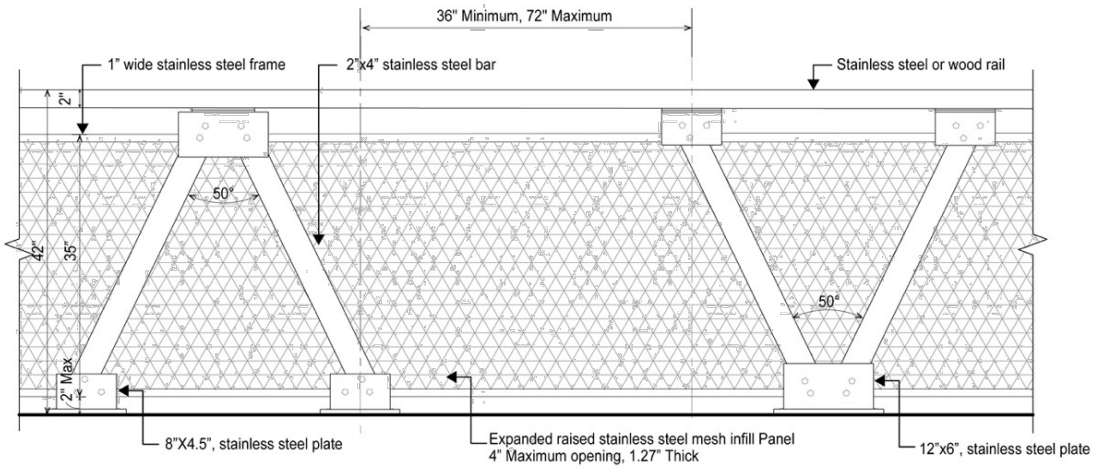

GUARDRAIL (TYPICAL)
Front Elevation

GUARDRAIL TERMINATION
Front Elevation

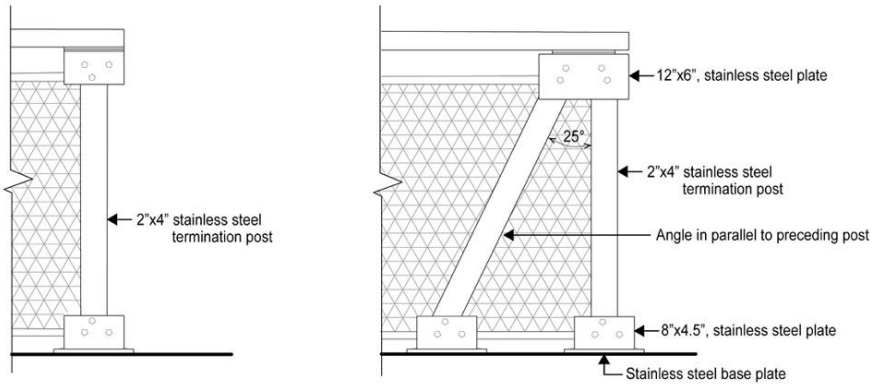

Alternate 1 Alternate 2

GUARDRAIL (TYPICAL)
Side Elevation

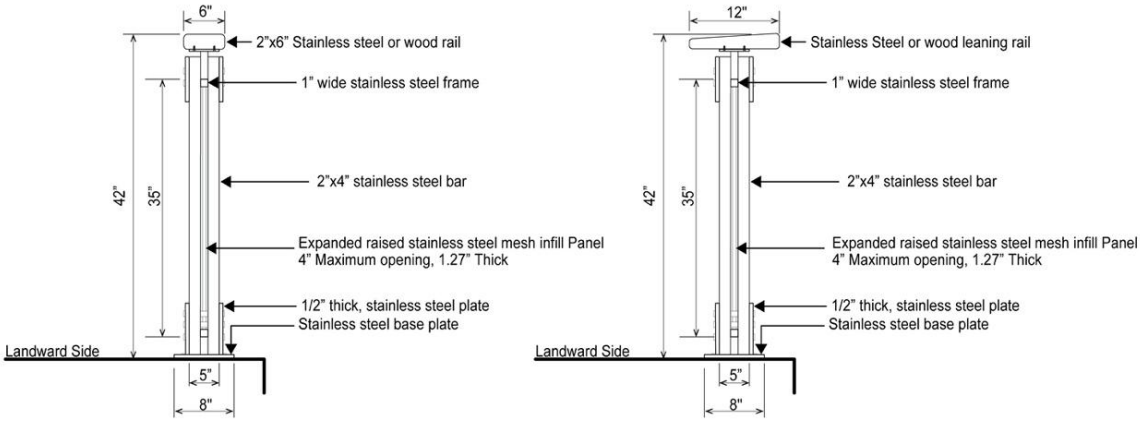

Alternate 1 (top rail) Alternate 2 (leaning rail)

All guardrail components and hardware shall be in unpainted stainless steel and shall conform to any additional standards set forth by DPR.

139-542 - Special design standards for seating

LAST AMENDED
11/23/2021

The design requirements of paragraph (b) of Section 62-62 (Design Requirements for Shore Public Walkways and Supplemental Public Access Areas) and the design reference standards of 62-652 (Seating) shall be modified as follows:

(a) Design feature seating

Planter ledges, seating walls, and seating steps may be provided, and shall be limited to 50 percent of the required seating. Walls and planter ledges shall be flat and smooth with at least one inch radius rounded edges.

(b) Seating depth

For all #waterfront public access areas#, the minimum seat depth requirement of paragraph (b) of Section 62-652 shall be modified to 16 inches.

139-543 - Special design standards for lighting

LAST AMENDED
11/23/2021

The lighting requirements of 62-653 (Lighting) shall be modified such that an average maintained level of illumination not less than 0.5 horizontal foot candle (lumens per foot) shall be provided throughout all walkable areas, and the average illumination to minimum foot candle uniformity ratio shall be no greater than 6:1 within any #waterfront public access area#.

In addition, fixtures providing the required lighting along any public access area shall comply with the lightpost illustration in this Section, or shall be of a comparable design which is the minimum modification needed. Where modification is sought, it shall be deemed suitable by the Chairperson of the City Planning Commission in consultation with the by the New York City Department of Transportation (DOT).

Fixtures providing supplemental lighting beyond the requirements of this Section need not comply with this illustration.

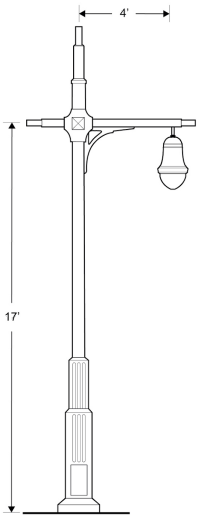

LIGHTPOST
Side Elevation

The lightpost shall conform to the street lighting standard drawings for a 17 foot “TBTA” short pole with “Tear Drop Luminare” set forth by the DOT.

139-544 - Special design standards for planting

LAST AMENDED
11/23/2021

The design requirements of paragraph (c)(1) of Section 62-62 (Design Requirements for Shore Public Walkways and Supplemental Public Access Areas) and the design reference standards of Section 62-655 (Planting and trees) shall be modified as follows:

(a) Reduction in planting requirement

An area equal to at least 35 percent of the area of the #shore public walkway# and #supplemental public access area# shall be planted. Such planting area may be reduced to 30 percent if an amenity is provided in accordance with the following tables:

TABLE 1

Amenity	Reduction per feature (in square feet)
Picnic tables	22 square feet
Historic interpretation elements	20 square feet

Public art pieces	100 square feet
Fountains and water features	150 square feet

TABLE 2

Amenity	Ratio of reduction to size of feature (in square feet)
Active recreation courts	1:1
Tot-lots and playgrounds	1:1
Dog runs	1:1
Boat or kayak launches	1:1.5
Interactive water features	1:1.5

(b) Shade tree substitution

Where shade trees are required, no more than one required shade tree may be substituted by a shading element covering at least 450 square feet, when viewed in plan.

139-545 - Special design standards for paving

LAST AMENDED
11/23/2021

The design reference standards of Section 62-656 (Paving) shall be modified as follows:

(a) #Upland connections#

Paving for driveways and pedestrian paths located within Type 2 #upland connections# shall be subject to the "shared street" standards of the New York City Department of Transportation for roadbeds and sidewalks.

In addition, where a Type 2 #upland connection# is provided with a vehicular turnaround, the paved area of the vehicular turnaround shall be designed with at least two different paving materials, or a single material with at least two different unit paver or slab sizes.

(b) Dimensional requirements

The maximum sizes for unit pavers or concrete slabs shall not apply.

139-55 - Special Signage Regulations

LAST AMENDED
11/23/2021

Any #accessory sign# that is provided adjacent to any #waterfront public access area# shall be limited to a single non-illuminated #sign#, indicating only the name or address of the #building# or commercial establishment to which it is #accessory#, not exceeding 16 inches in height.

139-56 - Special Maintenance and Operation Regulations

LAST AMENDED
11/23/2021

The owners of two or more parcels may, either for purposes of certification pursuant to Section 62-811 or at any time thereafter, submit an alternate plan to the Chairperson of the City Planning Commission for the joint maintenance and operation of #waterfront public access areas# on such parcels, through an association or other entity established for this purpose or by other method. Such plan may include, in addition to provisions for maintenance and operation, alternate provisions with respect to security, liability and any other matters set forth in Section 62-72 (Performance and Maintenance Requirements), as well as special provisions for reporting and monitoring of compliance with obligations for maintenance and operation of the #waterfront public access areas#. Such plan and any instruments as are necessary for its implementation may be approved by the Chairperson and the Commissioner of Parks and Recreation upon a determination that:

(1) implementation of the plan would enhance maintenance and operation of the #waterfront public access areas# consistent with the purposes of this Chapter; and

(2) participation in the plan is available to owners of contiguous parcels identified in the Gowanus Canal Waterfront Access Plan on an equal basis.

Appendix A: Special Gowanus Mixed Use District Plan

Map 1: Subdistricts (11/23/21)

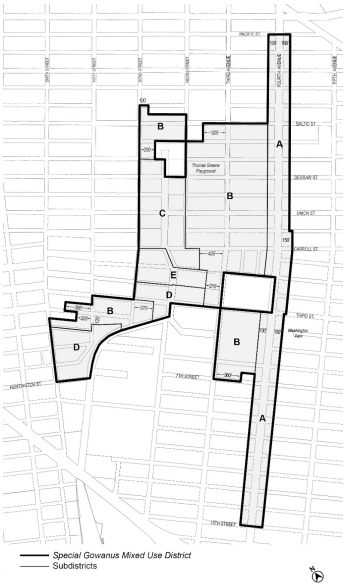

Map 2: Subareas (11/23/21)

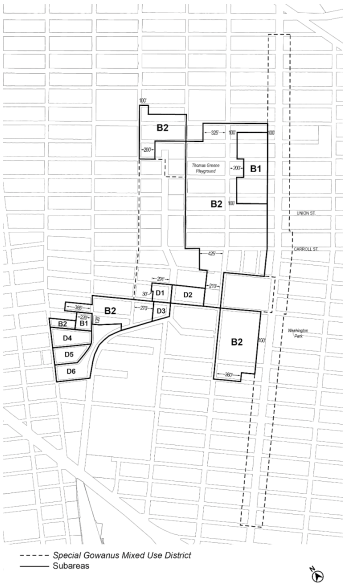

Map 3: Ground Floor Use Requirements (11/23/21)

Map 4: Sidewalk Widening Lines (11/23/21)

Appendix A - Special Gowanus Mixed Use District Plan

LAST AMENDED11/23/2021

Map 1: Subdistricts (11/23/21)

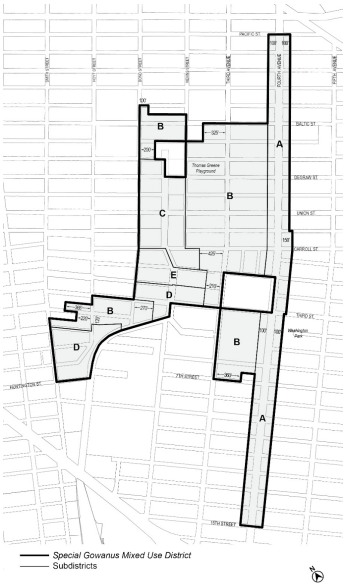
PACIFIC ST
BAYLIS STREET
HOYT STREET
SMITH STREET
HOOPER STREET
SIGEL STREET
FOURTH AVENUE
FIFTH AVENUE
BALTIC ST
DEGRAW ST
UNION ST
CARROLL ST
THIRD PL
Thomas Greene Playground
Washington Park
7TH STREET
NORTHWESTERN ST
11TH STREET
A
B
C
D
E
Special Gowanus Mixed Use District
Subdistricts

Map 2: Subareas (11/23/21)

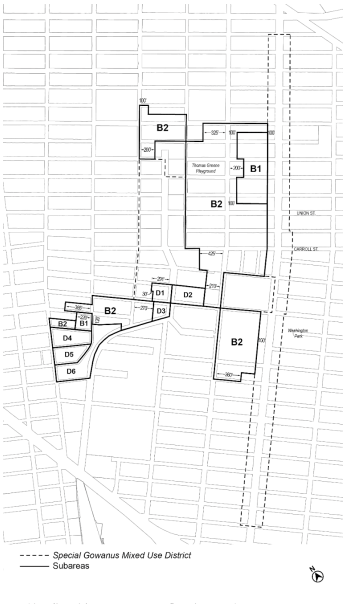

Map 3: Ground Floor Use Requirements (11/23/21)

Map 4: Sidewalk Widening Lines (11/23/21)

Appendix B - Gowanus Canal Waterfront Access Plan

LAST AMENDED11/23/2021

Map 1: Parcel Designation (11/23/21)

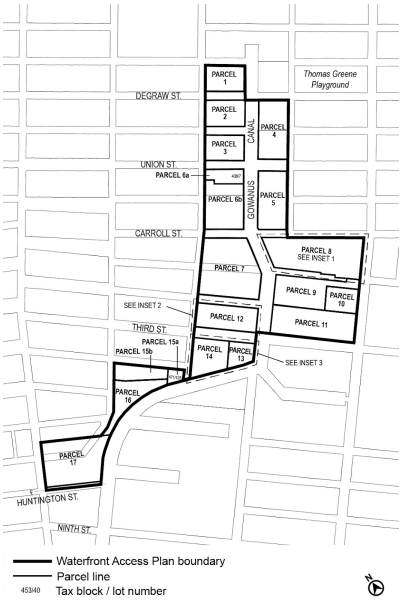

INSET 1

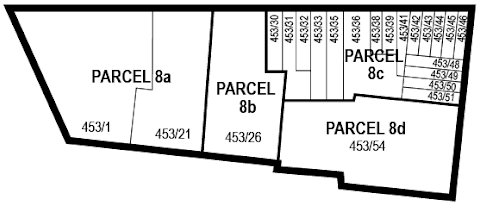

INSET 2

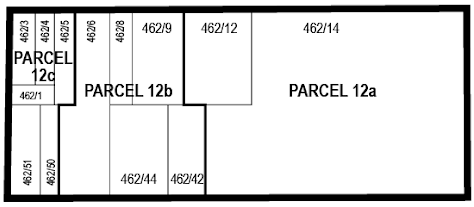

INSET 3

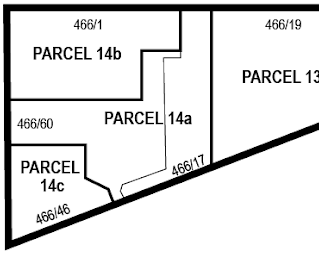

Tax lot line

453/40 Tax block / lot number

Map 2: Public Access Elements (11/23/21)

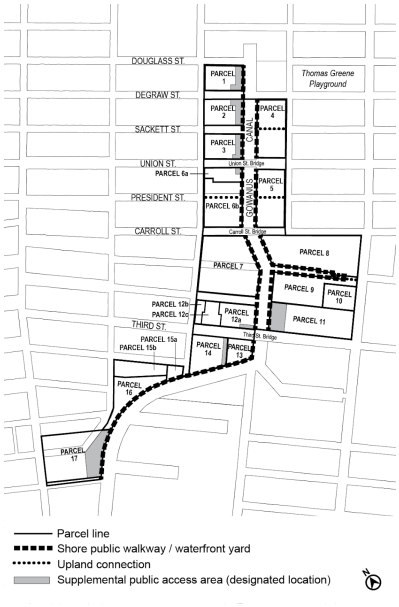
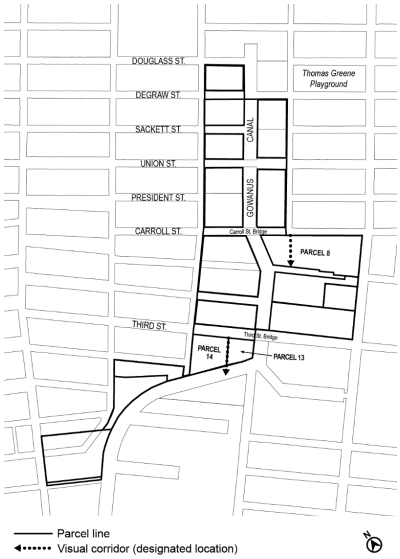
Map 3: Designated Visual Corridors (11/23/21)