Zoning Resolution

THE CITY OF NEW YORK
Eric Adams, Mayor

CITY PLANNING COMMISSION
Daniel R. Garodnick, Chair

139-541 - Special design standards for guardrails

File generated by https://zr.planning.nyc.gov on 12/11/2023

139-541 - Special design standards for guardrails

LAST AMENDED
11/23/2021

In addition to the provisions of paragraph (a) of Section 62-651 (Guardrails, gates and other protective barriers), guardrails shall comply with the illustrations provided in either paragraph (a) or (b) of this Section, or shall be of a comparable design which is the minimum modification needed. Where modification is sought, it shall be deemed suitable by the Chairperson of the City Planning Commission in consultation with the Department of Parks and Recreation (DPR).

(a) Option 1: vertical bar guardrail

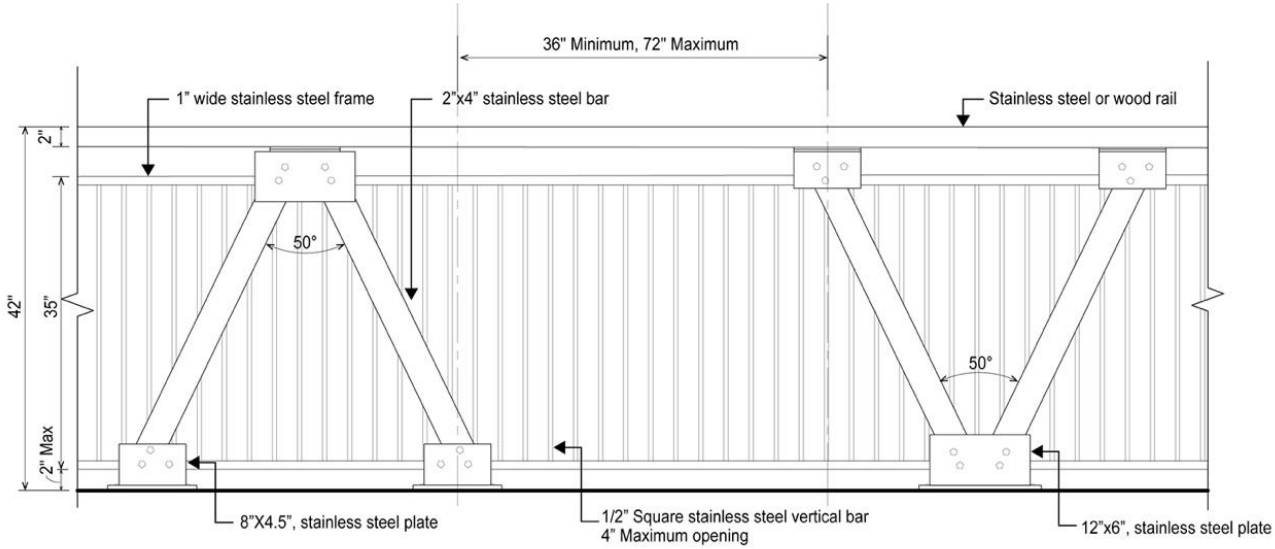

GUARDRAIL (TYPICAL)
Front Elevation

GUARDRAIL TERMINATION
Front Elevation

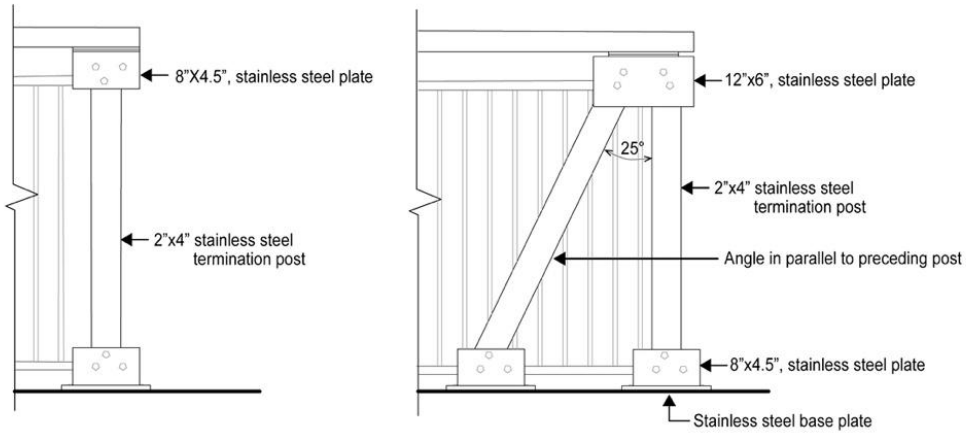

Alternate 1 Alternate 2

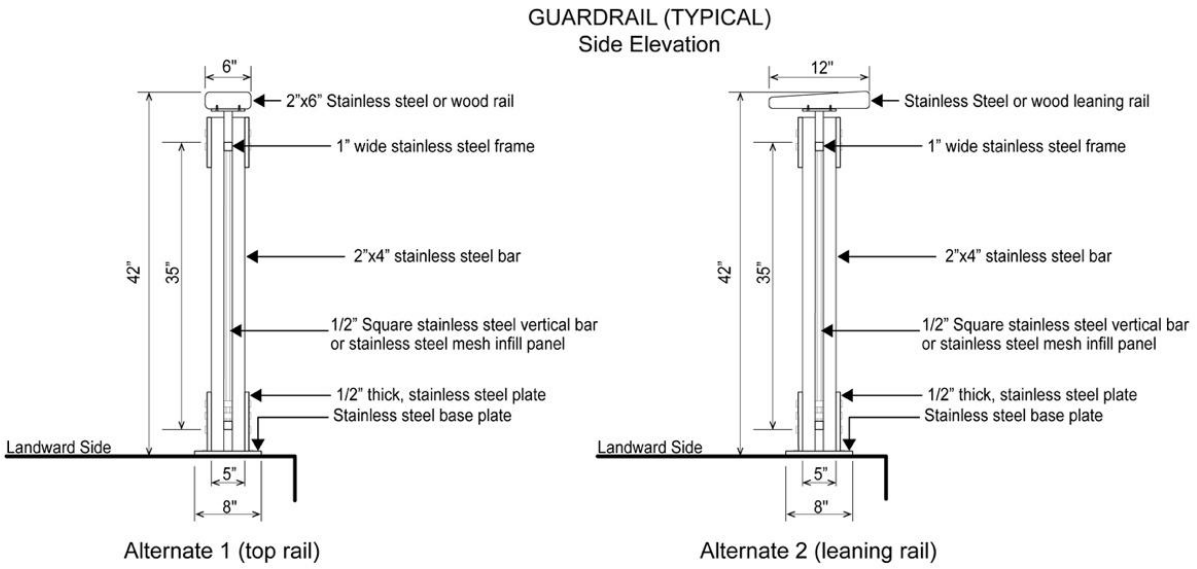

(b) Option 2: mesh guardrail

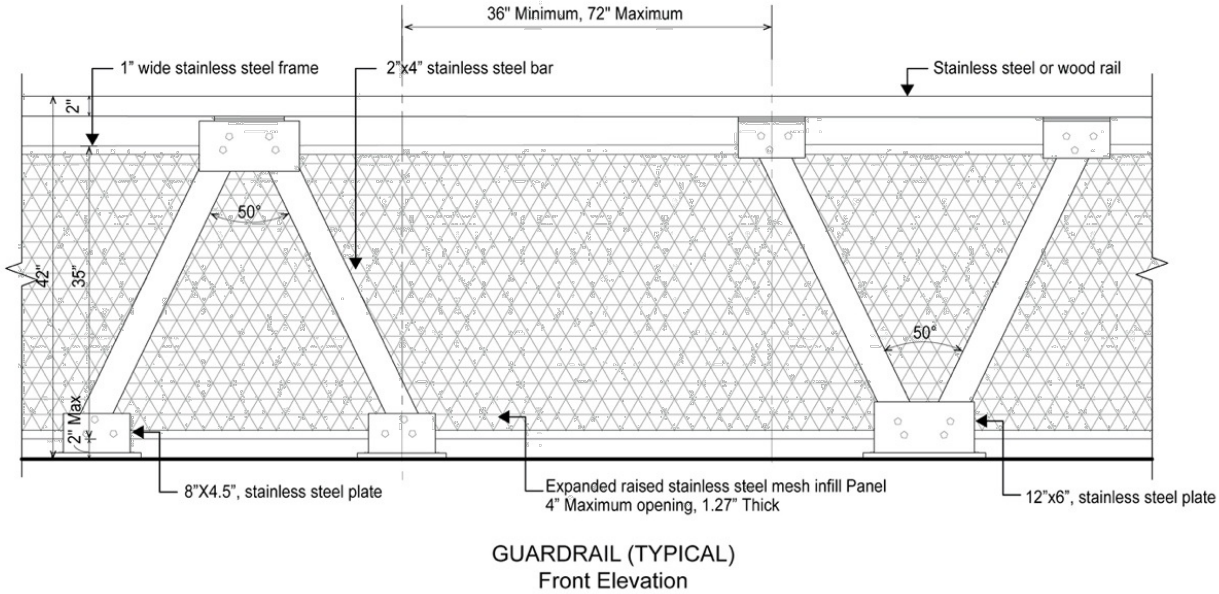

GUARDRAIL TERMINATION
Front Elevation

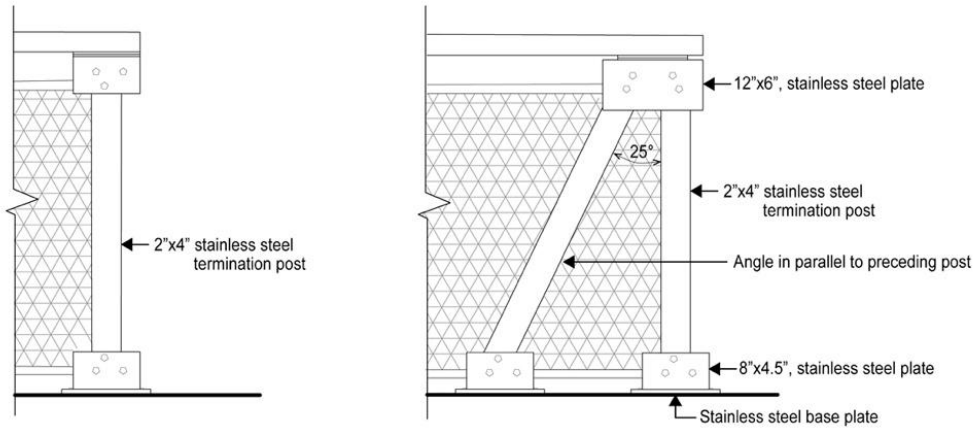

Alternate 1 Alternate 2

GUARDRAIL (TYPICAL)
Side Elevation

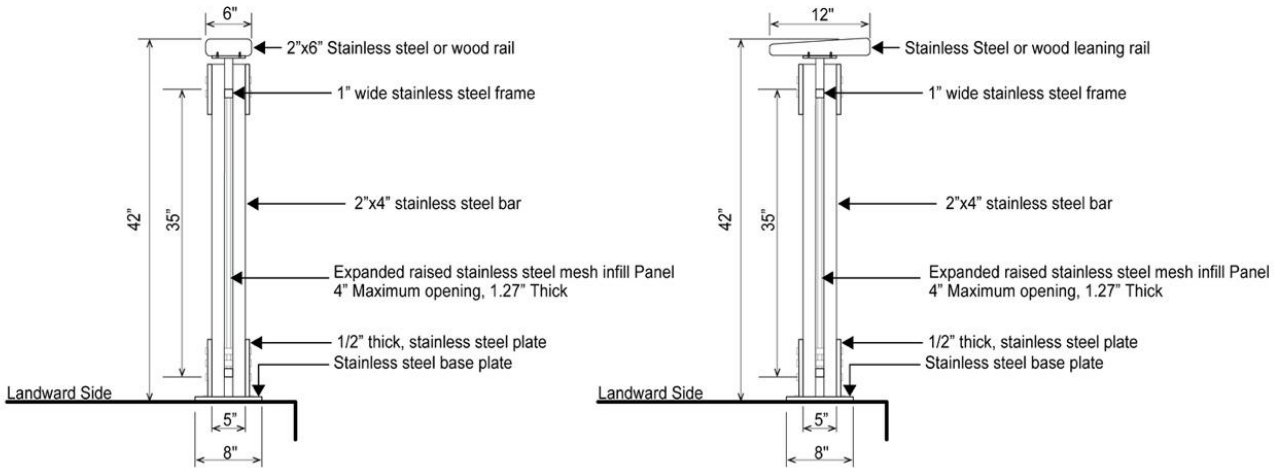

Alternate 1 (top rail) Alternate 2 (leaning rail)

All guardrail components and hardware shall be in unpainted stainless steel and shall conform to any additional standards set forth by DPR.