Zoning Resolution

THE CITY OF NEW YORK
Eric Adams, Mayor

CITY PLANNING COMMISSION
Daniel R. Garodnick, Chair

23-60 - HEIGHT AND SETBACK REGULATIONS

File generated by https://zr.planning.nyc.gov on 12/14/2023

23-60 - HEIGHT AND SETBACK REGULATIONS

LAST AMENDED
12/15/1961

23-61 - Applicability

LAST AMENDED
11/30/2017

R1 R2 R3 R4 R5 R6 R7 R8 R9 R10

In all districts, as indicated, height and setback regulations for a #building or other structure# shall be as set forth in Section 23-60, inclusive.

Height and setback regulations applicable to R1 through R5 Districts are set forth in Section 23-63. #Buildings# in R5D Districts shall also comply with additional provisions set forth in Article II, Chapter 8.

Height and setback regulations applicable to R6 through R10 Districts are set forth in Sections 23-64 (Basic Height and Setback Requirements), 23-65 (Tower Regulations) and 23-66 (Height and Setback Requirements for Quality Housing Buildings), as applicable.

In R6A, R6B, R7A, R7B, R7D, R7X, R8A, R8B, R8X, R9A, R9D, R9X, R10A or R10X Districts, all #buildings# containing #residences# shall comply with the #bulk# regulations for #Quality Housing buildings# set forth in Sections 23-62 (Permitted Obstructions) and 23-66. In R6, R7, R8, R9 or R10 Districts without a letter suffix, a #building# containing #residences# may be #developed# or #enlarged# pursuant to the basic height and setback requirements of Sections 23-62, 23-64 or 23-65, as applicable, or pursuant to the #bulk# regulations for #Quality Housing buildings#. All #Quality Housing buildings# shall also comply with additional provisions set forth in Article II, Chapter 8, as applicable.

Special height and setback provisions are set forth in Section 23-67 (Special Height and Setback Provisions for Certain Areas) for #zoning lots# adjoining a #public park#, as well as for certain areas in Community Districts 4, 6, 7 and 9 in the Borough of Manhattan. Additional provisions are set forth in Sections 23-68 (Special Provisions for Zoning Lots Divided by District Boundaries) and 23-69 (Special Height Limitations).

23-62 - Permitted Obstructions

LAST AMENDED
12/6/2023

In all #Residence Districts#, the obstructions set forth in this Section, inclusive, shall be permitted to penetrate a maximum height limit or #sky exposure plane# set forth in Sections 23-63 (Height and Setback Requirements in R1 Through R5 Districts), 23-64 (Basic Height and Setback Requirements), 23-66 (Height and Setback Requirements for Quality Housing Buildings) or 23-69 (Special Height Limitations).

23-621 - General permitted obstructions

LAST AMENDED
12/6/2023

In all #Residence Districts#, the following obstructions shall be permitted to penetrate a maximum height limit or #sky exposure plane#. These allowances are generally common to #Residence#, #Commercial# and #Manufacturing Districts#.

(a) Awnings and other sun control devices, provided that when located at a level higher than the first #story#, excluding a #basement#, all such awnings and other sun control devices:

(1) shall be limited to a maximum projection from a #building# wall of 2 feet, 6 inches, except when located on the first #story# above a setback;

(2) shall have solid surfaces that, in aggregate, cover an area no more than 30 percent of the area of the #building# wall (as viewed in elevation) from which they project; and

(3) may rise above the permitted #building# height, up to the height of a parapet wall or guardrail permitted in accordance with this Section. When located on the first #story# above a setback, awnings and other sun control devices shall be limited to a projection of 50 percent of the depth of the required setback, and shall be limited, in total, to 50 percent of the width of the #building# wall from which they project;

(b) #Building# columns, having an aggregate width equal to not more than 20 percent of the #aggregate width of street walls# of a #building#, to a depth not exceeding 12 inches, in an #initial setback distance#, optional front open area, or any other required setback distance or open area set forth in the applicable height and setback regulations;

(c) Chimneys or flues, with a total width not exceeding 10 percent of the #aggregate width of street walls# of a #building# at any level;

(d) Decks, and other surfaces for recreational activities, not more than 3 feet, 6 inches in height, as measured from the maximum height limit;

(e) Flagpoles or aerials;

(f) Parapet walls, not more than four feet in height, as measured from the maximum height limit. A guardrail with a surface at least 70 percent open or with an opacity no more than 30 percent (as viewed in elevation), shall be permitted above a parapet wall or within two feet of a parapet wall, provided such guardrail is not more than four feet above the accessible level of a roof. Such restriction on guardrail height shall not apply when located beyond two feet from a parapet wall;

(g) #Qualifying exterior wall thickness#;

(h) Roof thickness, up to 12 inches, to accommodate the addition of insulation, for #buildings# or portions of #buildings# constructed prior to December 6, 2023. For a #building# that has added roof thickness pursuant to this paragraph, the height of any other permitted obstruction may be measured from the finished level of the roof instead of the maximum height limit or #sky exposure plane#.

(i) Skylights, clerestories or other daylighting devices, not more than four feet in height, as measured from the maximum height limit. Such devices shall be limited to a #lot coverage# not greater than 10 percent of the #lot coverage# of the roof and be located at least eight feet from the #street wall# edge. However, such devices shall not be permitted obstructions above a roof with a slope greater than 20 degrees;

(j) Solar energy systems, #accessory# or as part of an #energy infrastructure equipment#:

(1) on the roof, or any portion thereof, of a #building#, with a slope less than 20 degrees: up to a height of 15 feet, or, when located on a bulkhead or other obstruction of this Section, a height of six feet; or

(2) on the roof, or any portion thereof, of a #building#, which has a slope of more than 20 degrees: up to a height of 60 inches in height, as measured perpendicular to the roof surface;

(k) Vegetated roofs, not more than 3 feet, 6 inches in height, excluding vegetation, as measured from the maximum height limit. On roofs with slopes greater than 20 degrees, vegetated roofs shall be limited to a height of 12 inches measured perpendicular to such roof surface;

(l) Weirs, check dams and other equipment for stormwater management, not more than 3 feet, 6 inches in height, as measured from the maximum height limit;

(m) Window washing equipment mounted on a roof;

(n) Wire, chain link or other transparent fences.

23-622 - Additional permitted obstructions

LAST AMENDED
12/6/2023

In all #Residence Districts#, the obstructions set forth in Section 23-621 (General permitted obstructions), as well as the following obstructions, shall be permitted to penetrate a maximum height limit or #sky exposure plane#.

(a) Balconies, unenclosed, subject to the provisions of Section 23-13;

(b) Dormers having an #aggregate width of street walls# equal to not more than 50 percent of the width of the #street wall# of a #detached# or #semi-detached# #single-# or #two-family residence#;

(c) Elevator or stair bulkheads (including shafts; and vestibules not larger than 60 square feet in area providing access to a roof), roof water tanks, #energy infrastructure equipment#, and #accessory# mechanical equipment (including enclosures), other than solar or wind energy systems (whether #accessory# or as part of #energy infrastructure equipment#), provided that:

(1) such obstructions shall be located not less than 10 feet from the #street wall# of a #building#, except that such obstructions need not be set back more than 25 feet from a #narrow# #street line# or more than 20 feet from a #wide# #street line#. However, such restrictions on location shall not apply to elevator or stair bulkheads (including shafts or vestibules), provided the #aggregate width of street walls# of such bulkheads within 10 feet of a #street wall#, facing each #street# frontage, does not exceed 30 percent of the #street wall# width of the #building# facing such frontage;

(2) the aggregate area of such obstructions, including any required screening, does not exceed 50 percent of the #lot coverage# of the #building#;

(3) the height of obstructions within an aggregate area equivalent to at least 20 percent of the #lot coverage# of the #building# shall not exceed 15 feet above the maximum permitted height; and

(4) the height of obstructions within the remaining #lot coverage#, not to exceed 30 percent of the #building# shall not exceed:

(i) in R3-2, R4, and R5 Districts, except R4-1, R4A, R4B and R5A Districts, a height of 25 feet above the maximum permitted height;

(ii) in R6 through R10 Districts:

(a) where the maximum permitted height of a #building# is 120 feet or lower, a height of 35 feet above the maximum permitted height; and

(b) where the maximum permitted height of a #building# is greater than 120 feet, a height of 55 feet above the maximum permitted height; and

(5) all equipment shall be subject to the applicable provisions of Section 26-60 (SPECIAL SCREENING AND ENCLOSURE PROVISIONS);

(d) Wind energy systems, #accessory# or as part of an #energy infrastructure equipment#, on portions of #buildings# with a height of 100 feet or greater, provided:

(1) the highest point of the wind turbine assembly does not exceed 55 feet;

(2) no portion of the wind turbine assembly is closer than 10 feet to any #lot line#; and

(3) the diameter of the swept area of the rotor does not exceed 15 feet.

23-623 - Permitted obstructions in certain districts

LAST AMENDED
12/6/2023

R2A R2X R3 R4 R4-1 R4A R5A

(a) In the districts indicated, permitted obstructions are limited to chimneys, #qualifying exterior wall thickness#, flagpoles or aerials, parapet walls, roof thickness, skylights, solar energy systems and vegetated roofs pursuant to Section 23-621. However, in R3-2 and R4 Districts, except R4-1, R4A and R4B Districts, elevator or stair bulkheads, roof water tanks, #energy infrastructure equipment# and #accessory# mechanical equipment shall additionally be permitted.

(b) In R2X Districts, dormers may be considered permitted obstructions if:

(1) the aggregate width of dormers facing the #street line# is equal to not more than 50 percent of the width of the #street wall line#;

(2) the aggregate width of dormers facing the #rear lot line# is equal to not more than 50 percent of the width of the #rear wall line#;

(3) the aggregate width of dormers facing a #side lot line# is equal to not more than 50 percent of the width of a straight line connecting and perpendicular to the #street wall line# and the #rear wall line#; and

(4) on a #corner lot#, the aggregate width of dormers facing a #side lot line# is equal to not more than 50 percent of the width of the #rear wall line# facing such #side lot line#.

R6 R7 R8 R9 R10

(c) In the districts indicated, for #Quality Housing buildings#, within a required front setback distance above a maximum base height, the following rules shall apply:

(1) Dormers shall be allowed as a permitted obstruction, provided that on any #street# frontage, the aggregate width of all dormers at the maximum base height does not exceed 60 percent of the width of the #street wall# of the highest #story# entirely below the maximum base height. For each foot above the maximum base height, the aggregate width of all dormers shall be decreased by one percent of the #street wall# width of the highest #story# entirely below the maximum base height.

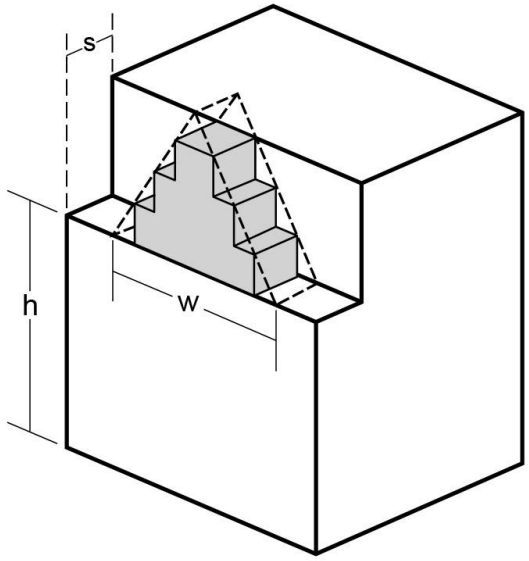

h - Maximum base height

s - Required setback or *initial setback distance*

w - Maximum width of dormer at maximum base height (60% of *street wall* width of highest *story* entirely below maximum base height)

Dormer

Dormer

(23-621c, 62-341d.2)

(2) Solar energy systems on a roof shall be limited to four feet or less in height, as measured from the maximum height limit, or the finished level of the roof, whichever is higher. However, on a roof with a slope greater than 20 degrees, such systems shall be limited to 18 inches in height as measured perpendicular to the roof surface.

(3) Wind energy systems shall not be allowed as permitted obstructions.

(4) Window washing equipment shall not be allowed as permitted obstructions.

23-63 - Height and Setback Requirements in R1 Through R5 Districts

LAST AMENDED
3/22/2016

R1 R2 R3 R4 R5

In the districts indicated, the height and setback of a #building or other structure# shall be as set forth in Section 23-631 (General provisions). Additional provisions pertaining to required side and rear setbacks are set forth in Section 23-632 (Required side and rear setbacks).

23-631 - General provisions

LAST AMENDED
5/12/2021

Height and setback regulations for R1 through R5 Districts are set forth in this Section. Such maximum heights may only be penetrated by permitted obstructions set forth in Section 23-62.

R1 R2

(a) In the districts indicated, except R1-2A, R2A and R2X Districts, the front wall or any other portion of a #building or other structure# shall not penetrate the #sky exposure plane# set forth in the following table:

MAXIMUM HEIGHT OF FRONT WALL AND REQUIRED FRONT SETBACKS

Height above #Front Yard Line# (in ft.)	#Sky Exposure Plane#		District
	Slope over #Zoning Lot# (expressed as a ratio of vertical distance to horizontal distance)		
	Vertical Distance	Horizontal Distance	
25	1 to	1	R1 R2

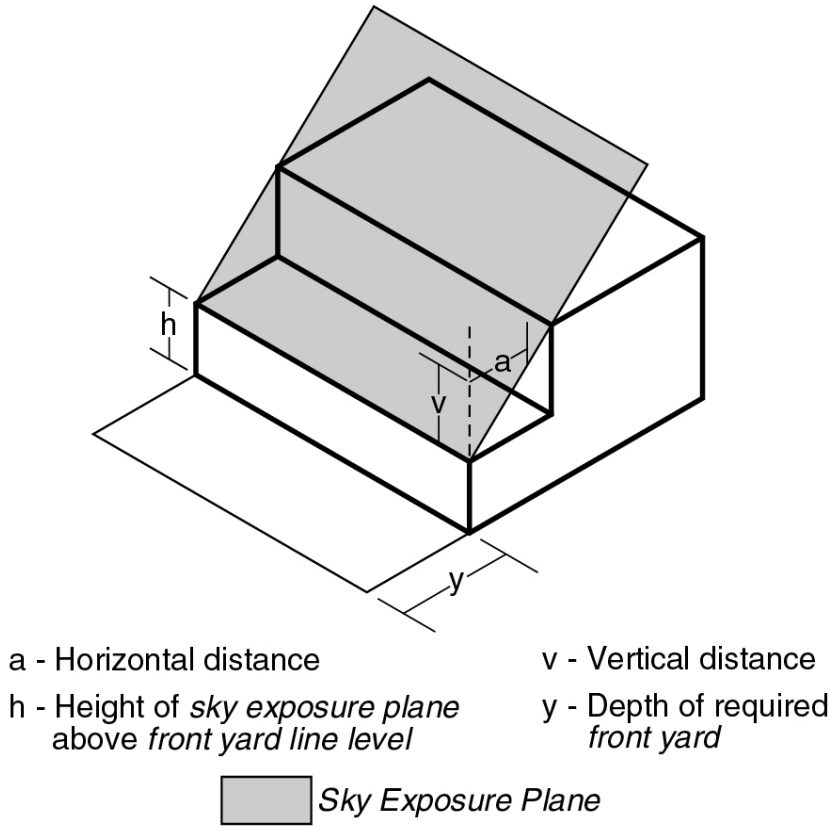

SKY EXPOSURE PLANE

(23-631a, 24–521)

R1-2A R2A R2X R3 R4 R4-1 R4A R5A

(b) In the districts indicated, the height and setback of a #building or other structure# shall be as set forth herein except where modified pursuant to paragraphs (h) and (j) of this Section.

For the purposes of this Section, where #base planes# of different elevations apply to different portions of a #building or other structure#, each such portion of the #building# may be considered to be a separate #building#. Furthermore, for the purposes of this Section, #building segments# may be considered to be separate #buildings# and #abutting# #semi-detached# #buildings# may be considered to be one #building#.

The perimeter walls of a #building or other structure# are those portions of the outermost walls enclosing the #floor area# within a #building or other structure# at any level and height is measured from the #base plane#. Perimeter walls are subject to setback regulations at a maximum height above the #base plane# of:

21 feet	R2A R2X R3 R4A
25 feet	R1-2A R4-1 R4 R5A
26 feet	R3 R4-1 R4A within #lower density growth management areas#

Above these heights, sloping planes control the maximum height of the #building or other structure# requiring either a setback or a pitched roof. These planes start at the maximum permitted height of the perimeter walls and meet at a ridge line of 35 feet above the

#base plane#. The exact locations of these planes are flexible and are determined in the steps set forth in paragraphs (b)(1) through (b)(5), as follows:

(1) At a height of 35 feet above and parallel to the #base plane#, a plane is projected above the area enclosed by and including the perimeter walls of the #building or other structure#. A second plane (the perimeter wall plane) is projected in the same manner at a height of 21 or 25 feet above the #base plane#. (See Figure A)

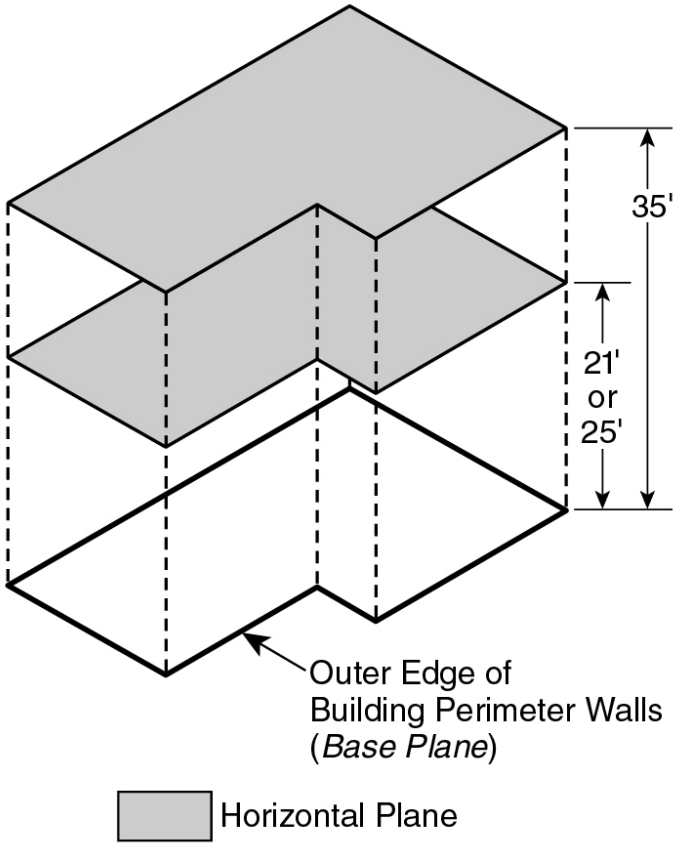

Figure A

(23-631b1)

(2) Each perimeter wall of the #building or other structure# with a horizontal dimension of eight feet or more which projects from an adjacent perimeter wall at least 18 inches may have an apex point directly above it on the 35 foot high plane. (See Figure B). The location of the apex point is flexible provided it is directly above its perimeter wall and provided a line drawn from the intersection of two perimeter walls to such an apex point does not exceed 80 degrees to the horizontal. An apex point is not required for each qualifying perimeter wall; however, the maximum number of apex points above each such wall is one.

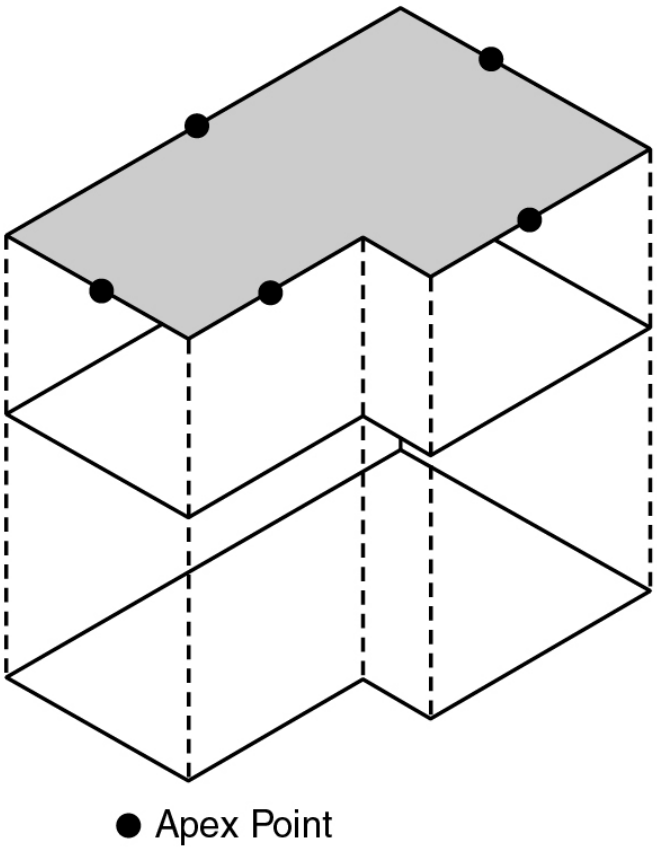

Figure B

(23-631b2)

(3) One "ridge line" is extended in a straight line from each apex point along the 35 foot high plane. Ridge lines which connect two apex points may cross other ridge lines. Otherwise, ridge lines which extend from only one apex point must terminate at a point of intersection with another ridge line. (See Figure C)

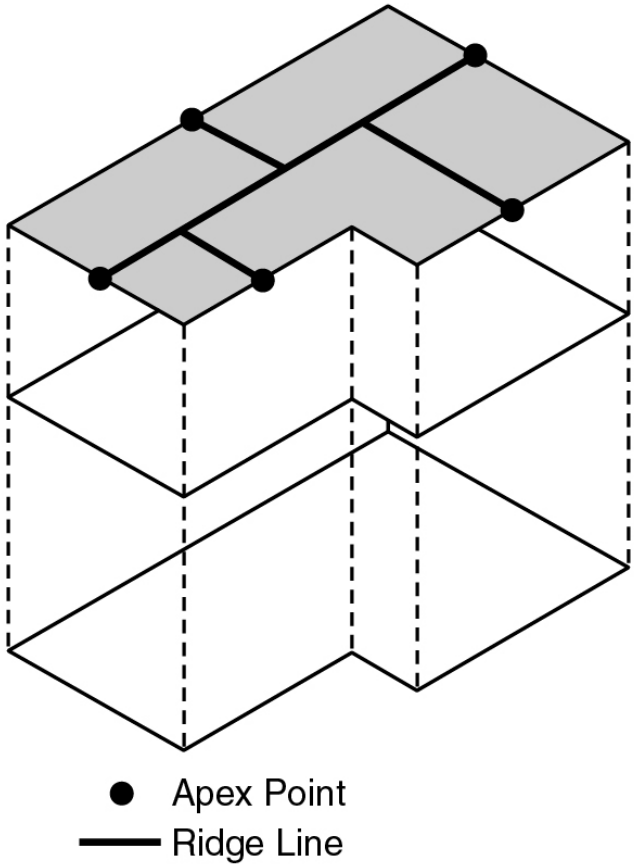

Figure C

(23-631b3)

(4) Sloping planes are extended in a straight line outward and downward from each ridge line until they intersect the perimeter wall plane. Every sloping plane generated must intersect the perimeter wall plane for the full width of the ridge line from which it extends. (See Figure D). The maximum angle of pitch for any sloping plane may not exceed 80 degrees to the horizontal. Sloping planes extended from ridge lines perpendicular or within 45 degrees of being perpendicular to each other may intersect, in which case the higher plane defines the limit of the envelope. Sloping planes extended from ridge lines parallel or within 45 degrees of being parallel to each other must intersect the perimeter wall plane without intersecting each other.

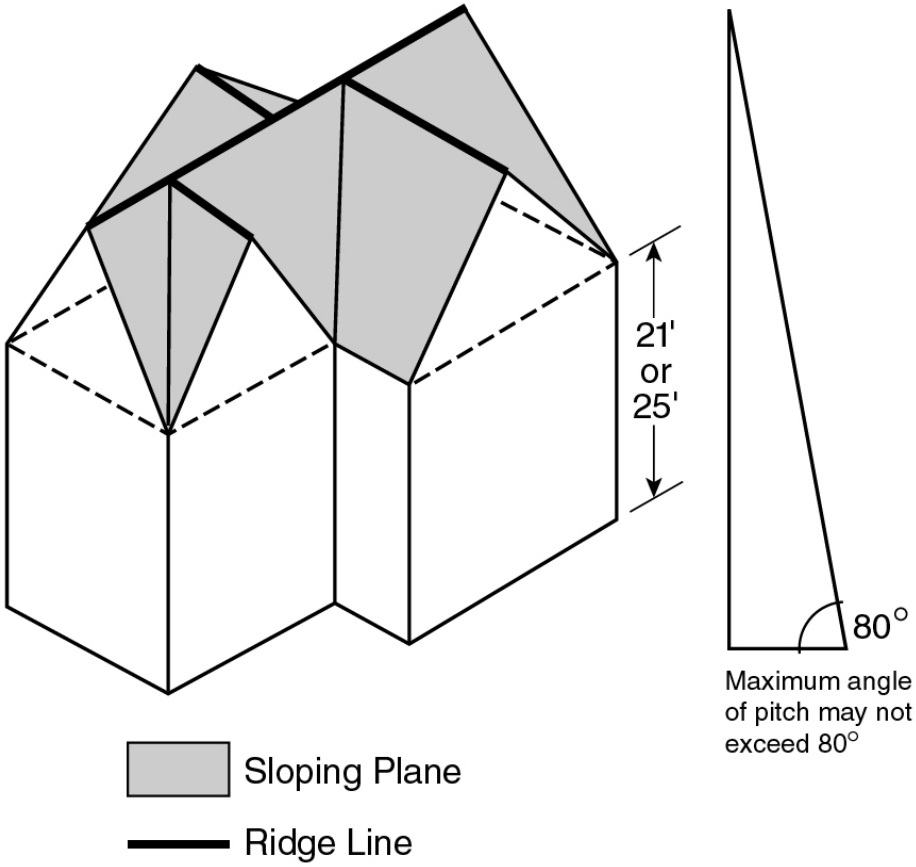

Figure D

(23-631b4)

(5) The perimeter walls are then extended vertically beyond the perimeter wall plane, up to the heights defined by the sloping planes generated in paragraph (4). (See Figure E). The perimeter walls of the #building or other structure#, the sloping planes and the perimeter wall extensions define the #building# envelope. (See Figure F). Those items listed in Section 23-44 (Permitted Obstructions in Required Yards or Rear Yard Equivalents), and roofed porches and porticoes subject to all applicable provisions, may penetrate the #building# envelope below the maximum permitted perimeter wall height. Eaves may extend the roof lines 18 inches beyond the exterior walls.

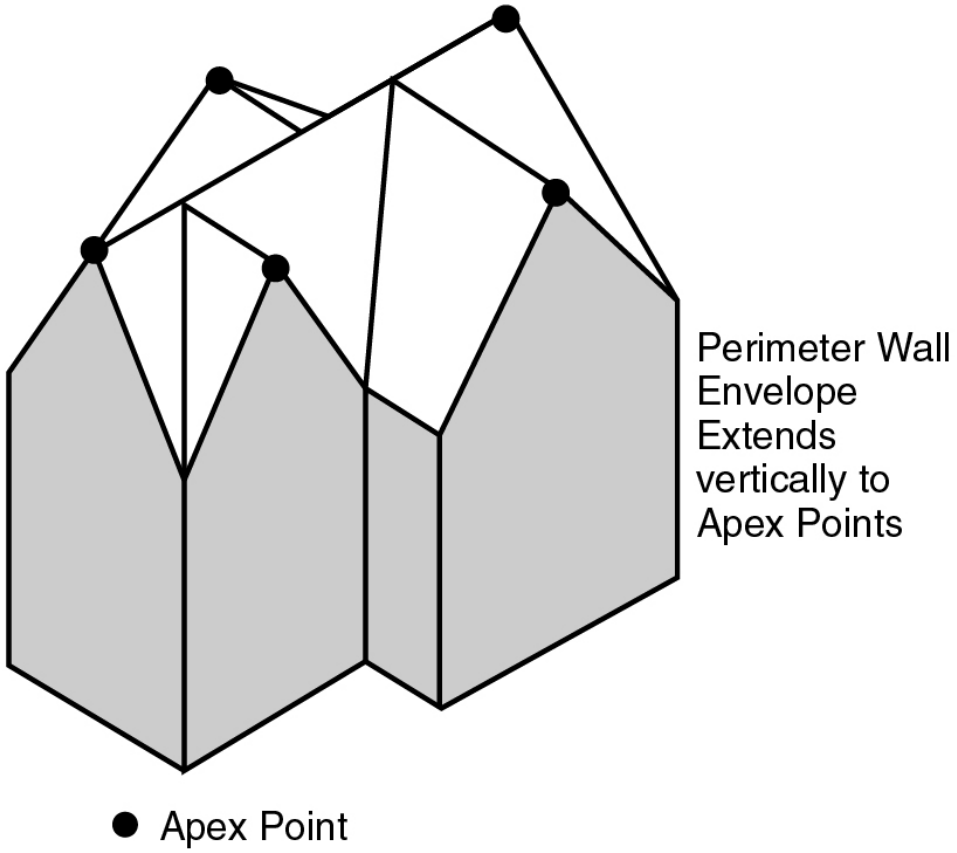

(23-631b5.1)

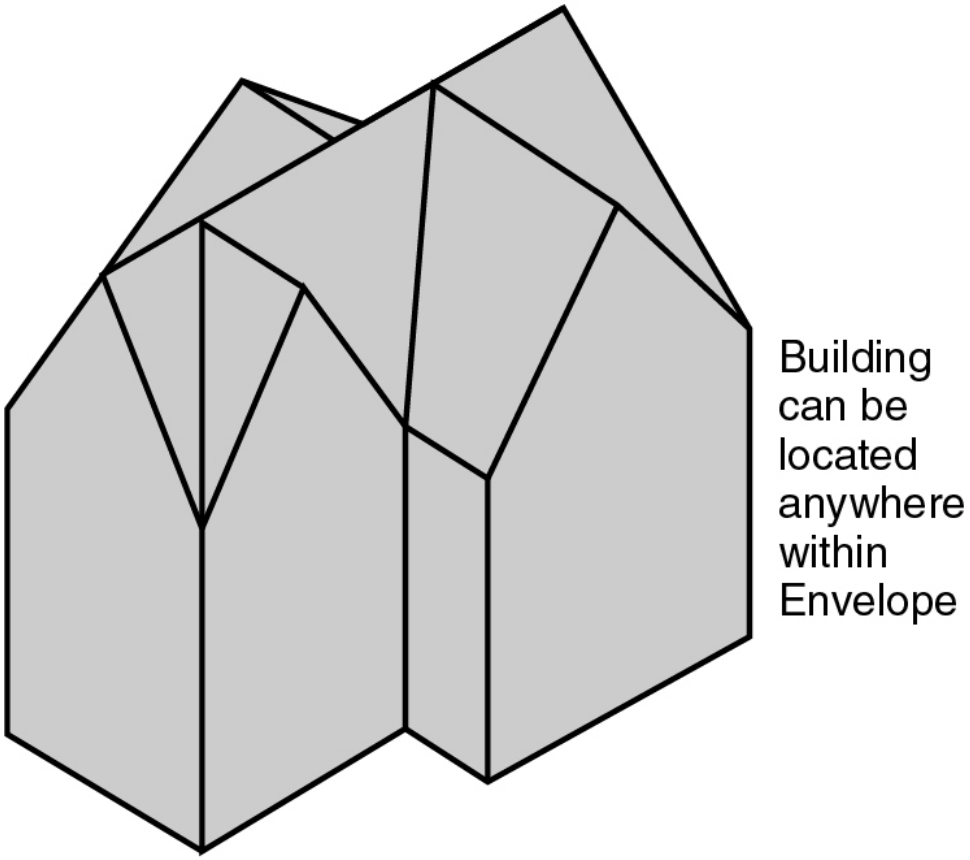

Figure E and F

(23-631b5.2)

(6) Special Situations

(i) For convex curved perimeter walls, the #building or other structure# must be within a plane curve tapering uniformly to a vertex located at a height of 35 feet. For concave curved perimeter walls, the #building or other structure# must lie within a plane curve extending from the maximum perimeter wall height to a ridge line parallel to the prolongation of the perimeter wall at the 35 foot level. Such plane curves may not exceed a pitch of 80 degrees in relation to a plane drawn parallel to the #base plane# at the maximum height of the permitted perimeter wall. (See Figure G).

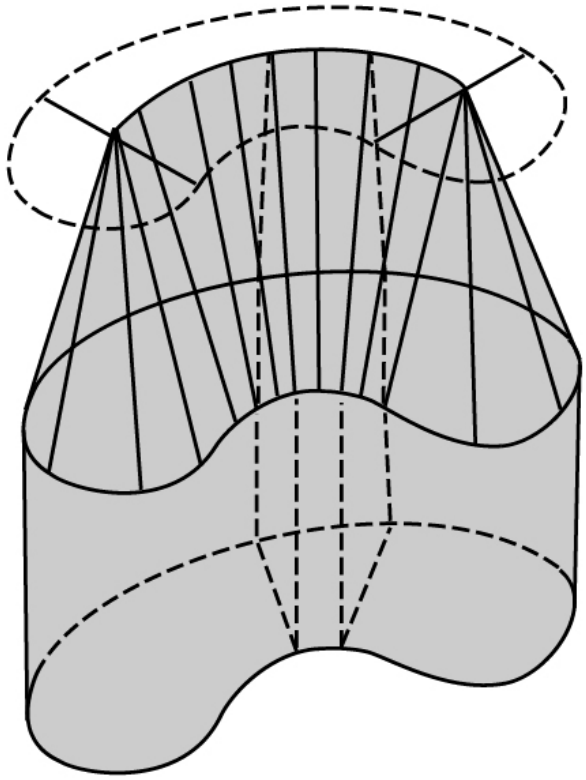

Figure G

(23-631b6.i)

(ii) In R2X Districts, at the 21 foot maximum permitted height of a perimeter wall, sloping planes are projected inwards and upwards. From a permitted front perimeter wall and from 21 feet above the #base plane# and 20 feet from and parallel to a #rear lot line#, such sloping plane shall not exceed a pitch of 45 degrees in relation to a plane drawn parallel to the #base plane# at a height of 21 feet. (See Figure H). Other sloping planes slope toward a ridge line at 35 feet and may not exceed a pitch of 80 degrees in relation to a plane drawn parallel to the #base plane# at a height of 21 feet.

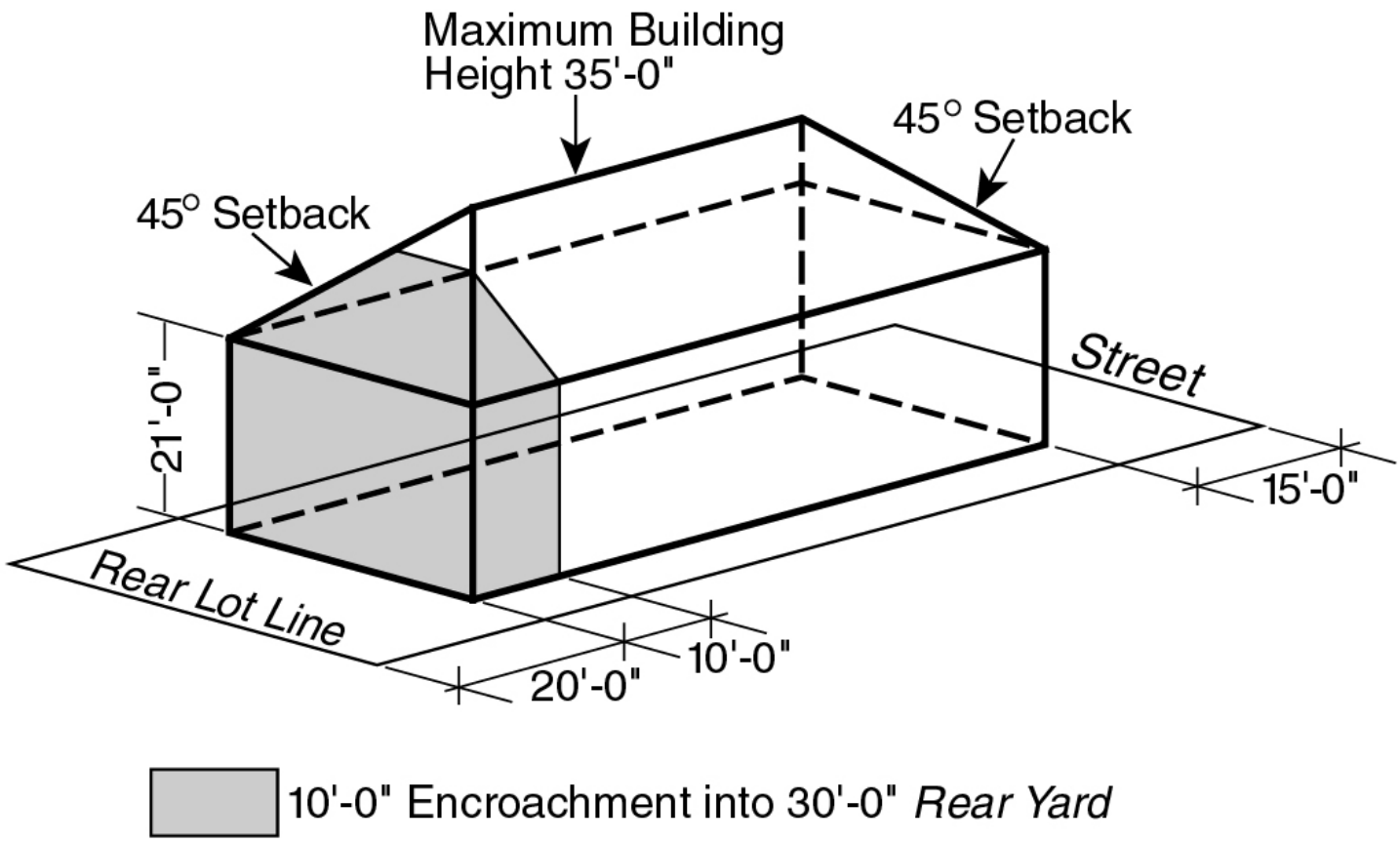

Figure H

(23-631b6.ii)

R4B

(c) In the district indicated, no portion of the #building or other structure#, including the apex of a roof, shall penetrate a plane 24 feet in height above the #base plane#.

R5

(d) In the district indicated, except R5A, R5B and R5D Districts, no portion of a #building or other structure#, including the apex of a roof, may penetrate a plane 40 feet above the #base plane#. In addition, the maximum height of a #street wall# above the #base plane# shall be 30 feet. Above such height, a setback of 15 feet is required. Within the setback distance, no portion of the #building or other structure#, including the apex of a roof, may penetrate a plane rising from the maximum #street wall# height, at 20 degrees to the horizontal. On #corner lots#, the 30 foot maximum #street wall# height shall apply to only one #street# frontage. #Buildings or other structures# which utilize the optional regulations of Section 23-143 applying to a #predominantly built-up area# shall be subject to the height and setback regulations for an R5B District. The provisions of this paragraph may be modified pursuant to paragraphs (h) and (j) of this Section.

R5B

(e) In the district indicated, no portion of a #building or other structure#, including the apex of a roof, may penetrate a plane 33 feet above the #base plane#. In addition, the maximum height of a #street wall# above the #base plane# shall be 30 feet. Above such height, no portion of the #building or other structure# shall penetrate a plane rising from the maximum #street wall# height, at 20 degrees to the horizontal, to a maximum height of 33 feet above the #base plane#. On #corner lots#, the 30 foot maximum #street wall# height shall apply to only one #street# frontage. The provisions of this paragraph may be modified pursuant to paragraph (h) of this Section.

R5D

(f) In the district indicated, no portion of a #building or other structure# shall penetrate a plane 40 feet above the #base plane#. However, where the ground floor level of a #building# provides a #qualifying ground floor# in accordance with the supplemental provisions set forth in paragraph (b)(2) of Section 23-662, the maximum height of a #building or other structure# may be increased to 45 feet, or four #stories#, whichever is less.

R3A R4-1 R4A R4B R5B

(g) In the districts indicated, a second #story# line-up is required as follows:

Where at least 75 percent of the #buildings# containing #residences# within 150 feet of the #side lot lines# of the #zoning lot# have a first #story# front projection that is at least 50 percent of the width of the #building#, the #street wall# shall be no closer to the #street line# than the second #story# #street wall# of an adjacent #building# containing #residences# facing on the same #street#.

Projections from the first #story# #street wall# are permitted provided that such projections are no closer to the #street line# than an adjacent #front yard line#, and such projections are no higher than 13 feet above the #street wall line level#. Projections from the second #story street wall# are permitted provided that the width of all projections at that level does not exceed 33 percent of the width of the #building# at the second #story#, and the depth of the projections does not exceed three feet.

(h) The height and setback regulations of this Section are modified as follows:

(1) In R3-1 and R3-2 Districts, #single-# or #two-family# #detached# #residences# on #zoning lots# of at least 9,500 square feet in area and at least 100 feet of frontage along a #street# may use the height and setback regulations applicable in an R2 District.

(2) In the #Special Ocean Parkway District#, the #Special Coney Island Mixed Use District#, and the #Special Hunters Point Mixed Use District#, for #buildings or other structures# subject to the regulations of an R5 District other than an R5D District, no portion of a #building or other structure#, including the apex of a roof, may penetrate a plane 40 feet above the #base plane#. In addition, the maximum height of a #street wall# above the #base plane# shall be 32 feet. Above such height, a setback of 15 feet is required. Within the setback distance, no portion of the #building or other structure#, including the apex of a roof, may penetrate a plane rising from the maximum #street wall# height at 20 degrees to the horizontal. On #corner lots#, the 32 foot maximum #street wall# height shall apply to only one #street# frontage.

In these special districts, for #developments# or #enlargements# which utilize the optional regulations applicable to a #predominantly built-up area#, the maximum height of a #building# containing #residences# shall not exceed 32 feet above the #base plane#. Furthermore, for such #developments# or #enlargements# with pitched roofs, the midpoint of such pitched roof shall not exceed a height of 32 feet above the #base plane#. The provisions of this paragraph may be modified pursuant to paragraph (j) of this Section.

(3) In accordance with Section 78-31 (Location of Buildings, Distribution of Bulk and Open Space and Modification of Height and Setbacks), #buildings# within a #large-scale residential development# may use the alternate height and setback regulations set forth in paragraphs (b)(1) through (b)(3) of Section 78-31.

R3-2 R4 R5

(i) In R3-2 Districts, #buildings# containing #affordable independent residences for seniors# may use the height and setback regulations applicable to an R4 District, as set forth in paragraph (b) of this Section.

(j) In R4 and R5 Districts, except R4-1, R4A, R4B, R5A, R5B and R5D Districts, the height and setback provisions set forth in paragraphs (b) and (d) of this Section shall apply to #buildings# containing #affordable independent residences for seniors#. However, where no #single-family# or #two-family residence# existed on the #zoning lot# within three years prior to the issuance of a building permit for the #development# or #enlargement# of such #building# containing #affordable independent residences for seniors#, such height and setback provisions shall be modified as follows:

(1) in R4 Districts, the height of the #building# shall not exceed 45 feet; and

(2) in R5 Districts, the height of the #building# shall not exceed 45 feet, except that beyond 25 feet of a #street line#, the height

of the #building# may be increased to a height of 55 feet where one or more of the following conditions are met:

(i) on the date of application for a building permit for such #development# or #enlargement#, not more than 50 percent of the aggregate length of the #block# frontage on both sides of the #street# facing each other is occupied by #single-family# or #two-family residences#;

(ii) an existing #building# on the same or adjacent #zoning lot# of such #development# or #enlargement# has a height of 45 feet or more; or

(iii) the #zoning lot# of such #development# or #enlargement# has a #lot area# of at least 1.5 acres.

(k) In the districts indicated, except R4-1, R4A, R4B, R5A, R5B and R5D Districts, the City Planning Commission may authorize a #building or other structure# that penetrates the height and setback regulations set forth in paragraphs (b), (d) or (i) of this Section, except for #buildings# utilizing the optional regulations for #predominantly built-up areas#. As a condition for granting such authorizations, the Commission shall find that:

(1) by concentrating permitted #floor area# in a #building# or #buildings# of greater height, the preservation of an existing #building#, topography, vegetation, or view corridors having environmental, historic or aesthetic value to the public will be assured, and that such preservation would not be possible by careful siting of lower #buildings# containing the same permitted #floor area#; or, for #affordable independent residences for seniors#, the additional #floor area# permitted is accommodated in an efficient manner;

(2) such modification is the least modification required to achieve the purpose for which it is granted;

(3) the proposed modification does not impair the essential character of the surrounding area; and

(4) the proposed modification will not have adverse effects upon light, air, and privacy of adjacent properties and of any existing #buildings# on the #zoning lot#.

Applications for authorizations shall be referred to the affected Community Board for a period of at least 30 days for comment. The Commission shall grant in whole or in part or deny the application within 60 days of the completion of the Community Board review period.

23-632 - Required side and rear setbacks

LAST AMENDED
3/22/2016

Side and rear setbacks shall be provided as specified in this Section. Permitted obstructions in required side and rear setbacks are set forth in paragraph (a) of this Section. Required side and rear setbacks for tall buildings in certain R1 through R5 Districts are set forth in paragraph (b) and required side and rear setbacks for #buildings# containing non-#residential uses# in certain R1 through R5 Districts are set forth in paragraph (c) of this Section.

(a) Permitted obstructions in required side and rear setbacks

Unenclosed balconies, subject to the provisions of Section 23-13 (Balconies), are permitted to project into or over any open areas required by the provisions of this Section. In addition, awnings and other sun control devices, decks, exterior wall thickness, parapet walls not more than four feet in height, roof thickness, solar energy systems up to four feet high, vegetated roofs and weirs are permitted as set forth in Section 23-62 (Permitted Obstructions). Chimneys or flues shall also be permitted, provided that the total width does not exceed 10 percent of the width of the #building's# walls facing such open area.

(b) Required side and rear setbacks for tall buildings in certain low bulk districts

R1 R2 R3 R4 R5

In R1 and R2 Districts, any portion of a #building or other structure# bounding a #side yard# or a #rear yard# which is more than

30 feet above the mean level of adjacent natural grade shall be set back from such #side yard# line or #rear yard line# for a distance equal to one-half the height of that portion of the #building or other structure# which is higher than 30 feet above the mean level of adjacent natural grade.

In R3, R4 and R5 Districts, except R5A and R5D Districts, any portion of a #building or other structure# bounding a #side yard# or a #rear yard# which is more than 33 feet above the level of the #base plane# shall be set back from such #side yard# line or such #rear yard line# for a distance equal to one-half the height of that portion of the #building or other structure# which is higher than 33 feet above the level of the #base plane# (see illustration below of R5 District Side Yard Setback).

However, the following modifications may be applied to #buildings# containing #affordable independent residences for seniors# :

(1) no #rear yard# setback need be provided; and

(2) for a #side yard#, the resultant setback required by the calculation above need not exceed a depth of 10 feet, as measured from the #building# wall fronting such #side yard#.

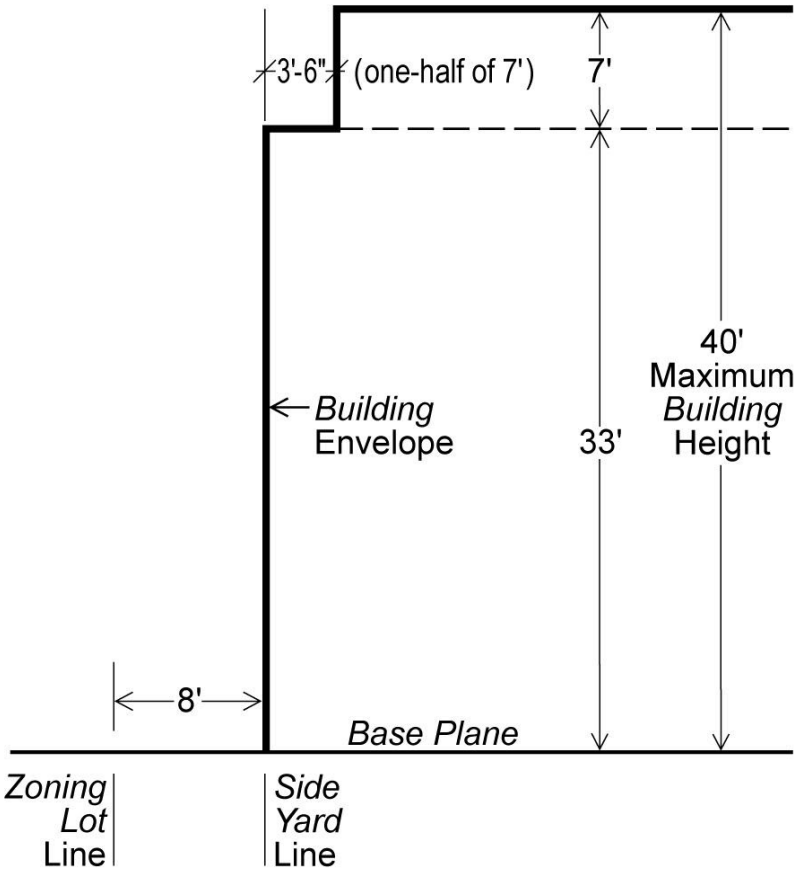

SIDE YARD SETBACK

(R5 example)

(23-632b)

(c) Required side and rear setbacks for permitted non-residential uses in low bulk districts

R1 R2 R3 R4 R5

In the districts indicated, except R5D Districts, no portion of any #building# used for permitted non-#residential uses# which is more than 30 feet or more than three #stories#, whichever is less, above the level of a #side yard# or #rear yard#, shall be nearer to a #side lot line# or #rear lot line# bounding such #yard# than a distance equal to the height above yard level of such portion of the #building#.

23-64 - Basic Height and Setback Requirements

LAST AMENDED
3/22/2016

R6 R7 R8 R9 R10

In the districts indicated without a letter suffix, for #buildings# other than #Quality Housing buildings#, the height and setback of a #building or other structure# shall be as set forth in Section 23-641 (Front setbacks), or 23-642 (Alternate front setbacks). In R9 and R10 Districts, towers are permitted in accordance with the provisions of Section 23-65.

23-641 - Front setbacks

LAST AMENDED
3/22/2016

R6 R7 R8 R9 R10

In the districts indicated without a letter suffix, if the front wall or other portion of a #building or other structure# is located at the #street line# or within the #initial setback distance# set forth in the following table, the height of such front wall or other portion of a #building or other structure# shall not exceed the maximum height above the #street line# set forth in the table. Above such specified maximum height and beyond the #initial setback distance#, the #building or other structure# shall not penetrate the #sky exposure plane# set forth in the table, except as otherwise provided in Sections 23-62 (Permitted Obstructions) or 23-65 (Tower Regulations).

MAXIMUM HEIGHT OF FRONT WALL AND REQUIRED FRONT SETBACKS

#Initial Setback Distance# (in feet)		Maximum Height of a Front Wall or other portion of a #Building or Other Structure# within the #Initial Setback Distance#	#Sky Exposure Plane#				
			Height above #Street Line# (in feet)	Slope over #Zoning Lot# (expressed as a ratio of vertical distance to horizontal distance)			
				On #Narrow Street#		On #Wide Street#	
On #Narrow Street#	On #Wide Street#			Vertical Distance	Horizontal Distance	Vertical Distance	Horizontal Distance
R6 or R7 Districts							
20	15	60 feet or six #stories#, whichever is less	60	2.7	to 1	5.6	to 1
R8 R9 or R10 Districts							

20	15	85 feet or nine #stories#, whichever is less	85	2.7	to 1	5.6	to 1

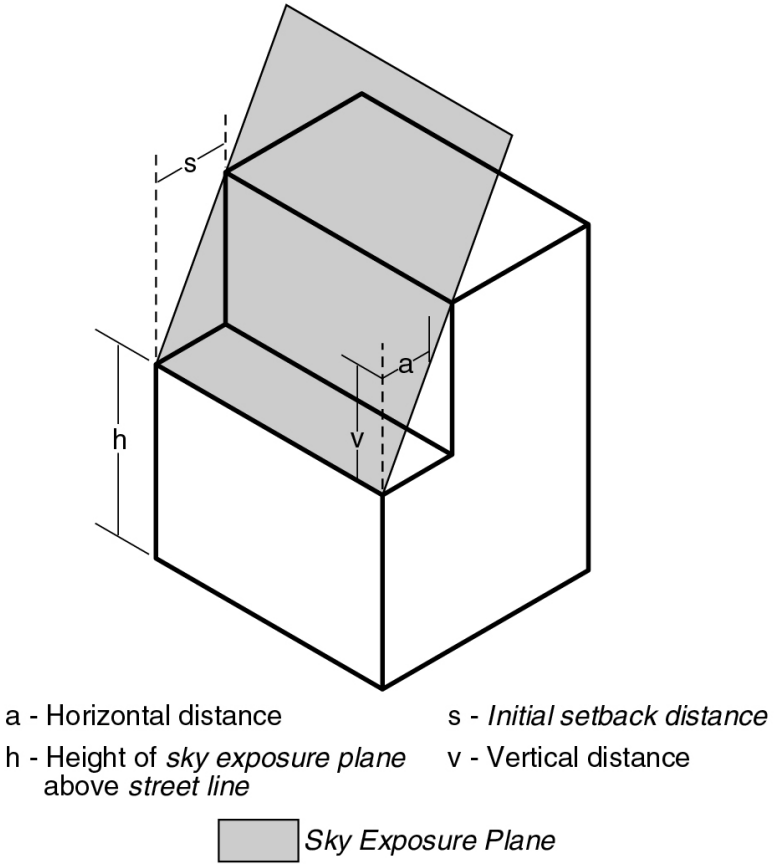

SKY EXPOSURE PLANE

R6 R7 R8 R9 R10 Districts

(23–641, 24–522, 33–432, 43–43)

23-642 - Alternate front setbacks

LAST AMENDED
3/22/2016

R6 R7 R8 R9 R10

In the districts indicated without a letter suffix, if an open area is provided along the entire length of the #front lot line# with the minimum depth set forth in the table in this Section, the provisions of this Section may apply in lieu of the provisions of Section 23-641 (Front setbacks). The #building or other structure# shall not penetrate the #sky exposure plane# set forth in the table, except as otherwise provided in Sections 23-62 (Permitted Obstructions) or 23-65 (Tower Regulations).

In R9 or R10 Districts, the provisions of this Section shall be inapplicable to any #development# or #enlargement# with more than 25 percent of the total #floor area# of the #building# in #residential use#.

ALTERNATE REQUIRED FRONT SETBACKS

Depth of Optional Front Open Area (in feet, measured perpendicular to #street line#)		Alternate #Sky Exposure Plane#				
		Height above #Street Line# (in feet)	Slope over #Zoning Lot# (expressed as a ratio of vertical distance to horizontal distance)			
			On #Narrow Street#		On #Wide Street#	
On #Narrow Street#	On #Wide Street#		Vertical Distance	Horizontal Distance	Vertical Distance	Horizontal Distance
R6 or R7 Districts						
15	10	60	3.7	to 1	7.6	to 1
R8 R9 or R10 Districts						
15	10	85	3.7	to 1	7.6	to 1

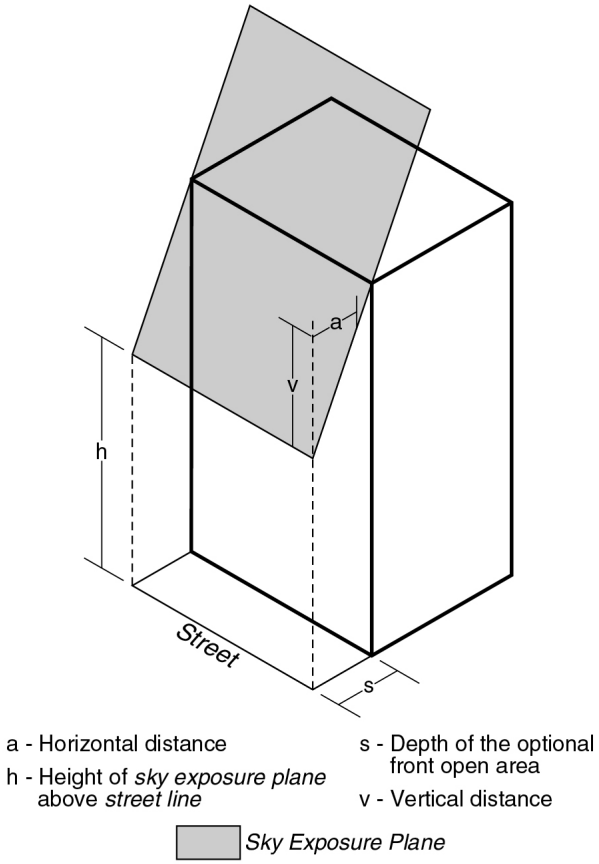

ALTERNATE SKY EXPOSURE PLANE

R6 R7 R8 R9 R10 Districts

(23–642, 24–53, 33–442, 43–44)

23-65 - Tower Regulations

LAST AMENDED
3/22/2016

R9 R10

In the districts indicated without a letter suffix, except for #Quality Housing buildings#, and except as set forth in paragraph (c) of this Section, any portion or portions of #buildings# which in the aggregate occupy not more than 40 percent of the #lot area# of a #zoning lot#, or for #zoning lots# of less than 20,000 square feet, the percentage set forth in the table below, may penetrate an established #sky exposure plane# in accordance with the provisions of this Section. Such portions of #buildings# that penetrate a #sky exposure plane# are hereinafter referred to as towers.

LOT COVERAGE OF TOWERS ON SMALL ZONING LOTS

Area of #Zoning Lot# (in square feet)	Maximum Percent of #Lot Coverage#
10,500 or less	50
10,501 to 11,500	49
11,501 to 12,500	48
12,501 to 13,500	47
13,501 to 14,500	46
14,501 to 15,500	45
15,501 to 16,500	44
16,501 to 17,500	43
17,501 to 18,500	42
18,501 to 19,999	41

#Buildings# #developed# or #enlarged# with towers shall comply with either tower-on-a-base regulations or standard tower regulations, as follows:

(a) Applicability of tower-on-a-base regulations

The tower-on-a-base regulations of Section 23-651 shall apply to any such #building# that:

(1) contains more than 25 percent of its total #floor area# in #residential use#; and

(2) is located on a #zoning lot# that fronts upon a #wide street# and is either within 125 feet from such #wide street# frontage along the short dimension of the #block# or within 100 feet from such #wide street# frontage along the long dimension of

the #block#.

If a portion of such #building# is #developed# or #enlarged# with a tower the entire #zoning lot# shall be subject to the provisions of Section 23-651 (Tower-on-a-base).

(b) Applicability of standard tower regulations

The standard tower regulations of Section 23-652 shall apply to any such #building# that does not meet the location and #floor area# criteria of paragraph (a) of this Section.

(c) Inapplicability of tower regulations

The provisions of this Section shall not apply to any #building# located wholly or partly in a #Residence District#, that is within 100 feet of a #public park# with an area of one acre or more, or a #street line# opposite such a #public park#.

23-651 - Tower-on-a-base

LAST AMENDED
3/22/2016

Any #development# or #enlargement# that meets the location and #floor area# criteria of paragraph (a) of Section 23-65 and includes a tower shall be constructed as a tower-on-a-base, in accordance with the regulations set forth in this Section. The height of all #buildings or other structures# shall be measured from the #base plane#.

(a) Tower regulations

(1) At any level above a #building# base (referred to hereinafter as a "base"), any portion or portions of a #building# (referred to hereinafter as a "tower") shall occupy in the aggregate:

(i) not more than 40 percent of the #lot area# of a #zoning lot# or, for a #zoning lot# of less than 20,000 square feet, the percentage set forth in the table in Section 23-65 (Tower Regulations); and

(ii) not less than 30 percent of the #lot area# of a #zoning lot#.

However, the highest four #stories# of the tower or 40 feet, whichever is less, may cover less than 30 percent of the #lot area# of a #zoning lot# if the gross area of each #story# does not exceed 80 percent of the gross area of that #story# directly below it.

(2) Any tower located above a base shall not be subject to the provisions of Section 23-64 (Basic Height and Setback Requirements).

(3) At least 55 percent of the total #floor area# permitted on the #zoning lot# shall be located in #stories# located either partially or entirely below a height of 150 feet.

When the #lot coverage# of the tower portion is less than 40 percent, the required 55 percent of the total #floor area# distribution, within a height of 150 feet, shall be increased in accordance with the following requirement:

Percent of #Lot Coverage# of the Tower Portion	Minimum Percent of Total #Building Floor Area# Distribution Below the Level of 150 Feet
40.0 or greater	55.0
39.0 to 39.9	55.5

38.0 to 38.9	56.0
37.0 to 37.9	56.5
36.0 to 36.9	57.0
35.0 to 35.9	57.5
34.0 to 34.9	58.0
33.0 to 33.9	58.5
32.0 to 32.9	59.0
31.0 to 31.9	59.5
30.0 to 30.9	60.0

(4) At all levels, such tower shall be set back from the #street wall# of a base at least 15 feet along a #narrow street# and at least 10 feet along a #wide street#, except that such dimensions shall include the depth of any permitted recesses in the #street wall#.

(5) No tower or portion thereof shall be located on a #narrow street# at a distance that is more than 100 feet from the intersection with a #wide street#.

Unenclosed balconies, subject to the provisions of Section 23-13 (Balconies), are permitted to project into or over open areas not occupied by towers.

For the purposes of determining the permitted tower coverage and the required minimum distance between #buildings# or portions thereof, that portion of a #zoning lot# located within 125 feet from the #wide street# frontage along the short dimension of a #block# shall be treated as if it were a separate #zoning lot#.

(b) #Building# base regulations

(1) #Street wall# location

(i) On a #wide street#, and on a #narrow street# within 125 feet of its intersection with a #wide street#, the #street wall# of the base shall occupy the entire #street# frontage of a #zoning lot# not occupied by existing #buildings#. At any height, at least 70 percent of the width of such #street wall# shall be located within eight feet of the #street line#, and the remaining 30 percent of such #street wall# may be recessed beyond eight feet of the #street line# to provide #outer courts# or balconies.

However, no such recesses shall be permitted within 20 feet of an adjacent #building# fronting on the same #street line# or within 30 feet of the intersection of two #street lines#.

(ii) On a #narrow street# beyond 125 feet from its intersection with a #wide street#, no #street wall# of a base is required nor shall any #street wall# provided beyond 125 feet count toward the computation of any permitted recesses on such wall.

(iii) Where the #street wall# of an adjacent #building# fronting on the same #street line# is located within 10 feet of the #street line#, the #street wall# of the base shall be either located at the #street line# or aligned with the #street

wall# of the adjacent #building# for a distance of not less than 20 feet measured horizontally from the side wall of such existing #building#.

(2) Height of #street wall#

All #street walls# of a base shall rise vertically without setback to a height of not less than 60 feet nor more than 85 feet except:

(i) On a #wide street#, if the height of the #street wall# of an adjacent #building# fronting on the same #street line# exceeds 60 feet and if such #street wall# is located within 10 feet of the #street line#, the #street wall# of the base shall match the height of the #street wall# of the adjacent #building# to a maximum height of 100 feet by either of three alternatives:

(a) the #street wall# of the base shall be extended vertically to the height of the adjacent #building# for a distance of not less than 20 feet measured horizontally from the side wall of such adjacent #building#;

(b) at least 50 percent of the width of the #street wall# of the base shall be extended vertically to the height of the adjacent #building#; or

(c) a dormer shall be provided pursuant to paragraph (b)(3) of this Section. Such dormer shall match the height of the adjacent #building#.

Such #street wall# of the base fronting on a #wide street# may be extended along a #narrow street# within 70 feet of its intersection with the #wide street#.

(ii) On a #narrow street# beyond 100 feet of its intersection with a #wide street#, the #street wall# of a base shall rise vertically to a height of at least 60 feet when the adjacent #building# is either less than 60 feet or greater than 85 feet, or match the height of the adjacent #building# when the height of such #building# is between 60 feet and 85 feet.

For the purposes of this paragraph, (b)(2), inclusive, the height of an adjacent #building# shall be the height of a #street wall#, before setback, if applicable, of that portion of an existing #building# nearest the #development# or #enlargement#, fronting on the same #street line#, and located on the same or an adjoining #zoning lot#.

(3) Dormer

For the purposes of this Section, a dormer shall be a vertical extension of the #street wall# of a base allowed as a permitted obstruction within a required front setback area. A dormer may be located anywhere on a #wide street#, and on a #narrow street# within 70 feet of its intersection with a #wide street#.

On any #street# frontage, the aggregate width of all dormers at the required initial setback level shall not exceed 60 percent of the width of the #street wall# of the highest #story# of the base. For each foot of height above the base, the aggregate width of all dormers at that height shall be decreased by one percent of the #street wall# width of the highest #story# of the base. Such dormer shall count as #floor area# but not as tower #lot coverage#.

(4) Open areas

All open areas at ground level, located between the #street line# and the #street wall# of a base shall be landscaped except in front of entrances and exits to the #building#.

(c) Modification of tower coverage and #floor area# distribution requirements

The tower #lot coverage# and #floor area# distribution requirements set forth in paragraph (a)(3) of this Section shall be modified for #buildings# that provide articulation of a base in accordance with the following provisions:

(1) Recesses

Recesses shall occupy, in the aggregate, between 30 and 50 percent of the width of each eligible #story# of the base, and measure at least two feet in depth. In addition, the width of any individual recess provided within eight feet of the #street line# shall not exceed 25 percent of the width of the #street wall# of the base, unless such recess is provided in combination with an additional recess located beyond eight feet of the #street line#.

Furthermore, all recesses shall comply with the provisions of paragraph (b)(1) of this Section or paragraph (a)(1) of Section 35-64 (Special Tower Regulations for Mixed Buildings), as applicable. For each #street# frontage of a #building# with recesses provided in accordance with this paragraph, (c)(1), the percent of #lot coverage# of the tower portion of the #building# may be decreased by 0.5 percent, and the minimum percent of total #building# #floor area# distribution below a level of 150 feet may be reduced by 0.25 percent.

(2) Dormers

For each #street# frontage with dormers, provided in accordance with paragraph (b)(3) of this Section, that measure, at their lowest level, at least 50 percent of the width of the #street wall# of the highest #story# of the base, and measure, at their highest level, at least 25 percent of the width of the highest #story# of the base, and rise at least 25 feet above the base, the percent of #lot coverage# of the tower portion of the #building# may be decreased by 0.5 percent, and the minimum percent of total #building# #floor area# distribution below a level of 150 feet may be reduced by 0.25 percent.

(3) Matching provision

For each #street# frontage that provides an extension of the #street wall# of a base that matches the height of an adjacent #building# in accordance with paragraph (b)(2)(i)(b) of this Section, the percent of #lot coverage# of the tower portion of the #building# may be decreased by 0.5 percent, and the minimum percent of total #building# #floor area# distribution below a level of 150 feet may be reduced by 0.25 percent.

However, the total percent of #lot coverage# of the tower portion of the #building# shall not be decreased by more than 2.0 percent, nor shall the minimum percent of total #building# #floor area# distribution below a level of 150 feet be reduced by more than 1.0 percent.

23-652 - Standard tower

LAST AMENDED
2/2/2011

Any #development# or #enlargement# that does not meet the location and #floor area# criteria of paragraph (a) of Section 23-65 and includes a tower shall be constructed as a standard tower in accordance with the regulations set forth in this Section.

At all levels, a tower shall be located not less than 15 feet from the #street line# of a #narrow street# and not less than 10 feet from the #street line# of a #wide street#.

Unenclosed balconies, subject to the provisions of Section 23-13 (Balconies), are permitted to project into or over open areas not occupied by towers.

23-66 - Height and Setback Requirements for Quality Housing Buildings

LAST AMENDED
3/22/2016

R6 R7 R8 R9 R10

In the districts indicated, the #street wall# location provisions of Sections 23-661 and the height and setback provisions of Section 23-662 shall apply to #Quality Housing buildings#. These provisions may be modified pursuant to the provisions of either Section 23-663 (Tower regulations in R9D and R10X Districts) or 23-664 (Modified height and setback regulations for certain Inclusionary Housing buildings or affordable independent residences for seniors), as applicable. Additional provisions are set forth in Section 23-665. Additional height and

setback provisions for #compensated developments# and #MIH developments#, as defined in Section 23-911, are set forth in Sections 23-951 and 23-952, respectively. The height of all #buildings or other structures# shall be measured from the #base plane#.

Where the City Planning Commission grants additional height to a #development# or #enlargement# subject to the provisions of Sections 23-662 or 23-664 pursuant to an authorization or special permit of this Resolution, the Commission may, in conjunction, increase the permitted number of #stories#.

23-661 - Street wall location

LAST AMENDED
3/22/2016

R6 R7 R8 R9 R10

In the districts indicated, the #street wall# location provisions of paragraphs (a), (b) or (c) of this Section shall apply to all #Quality Housing buildings#, as applicable.

Any #street wall# may be divided into different segments, and located at varying depths from the #street line#, to allow for #building# recesses, projections, #outer courts# and other forms of articulation, provided that each portion complies with the applicable #street wall# location provisions of paragraphs (a), (b) or (c) of this Section. Recesses, projections and other forms of articulation beyond the #street wall# locations established in paragraphs (a), (b) or (c) are permitted only in accordance with paragraph (d) of this Section.

R6A R7A R7D R7X R9D

(a) In the districts indicated, for all #buildings#, and for #Quality Housing buildings# on #wide streets# in R6 or R7 Districts without a letter suffix, the following shall apply:

(1) The #street wall# shall be located no closer to the #street line# than the closest #street wall#, or portion thereof, of an existing adjacent #building# on the same or an adjoining #zoning lot# located on the same #street# frontage, that is both within 10 feet of the #street line# and within 25 feet of such #Quality Housing building#. Where such existing adjacent #building#, or portion thereof, has #street walls# located at varying depths, the #street wall# shall not be located closer to the #street line# than the furthest portion of such existing adjacent #street wall# that is at least five feet in width.

(2) On #corner lots#, the #street wall# location provisions of paragraph (a)(1) shall apply along only one #street line#.

R6B R7B R8B

(b) In the districts indicated, for all #buildings#, and for #Quality Housing buildings# on #narrow streets# in R6 and R7 Districts without a letter suffix, the following shall apply:

(1) On #zoning lots# with at least 50 feet of frontage along a #street line#, the #street wall# shall be located no closer to the #street line# than the closest #street wall#, or portion thereof, of an existing adjacent #building# on the same or an adjoining #zoning lot# located on the same #street# frontage, that is both within 15 feet of the #street line# and within 25 feet of such #Quality Housing building#. Where such existing adjacent #building#, or portion thereof, has #street walls# located at varying depths, the #street wall# shall not be located closer to the #street line# than the furthest portion of such existing adjacent #street wall# that is at least five feet in width.

(2) On #zoning lots# with less than 50 feet of frontage along a #street line#, the #street wall# shall be located no closer to the #street line# than the closest #street wall#, or portion thereof, nor further from the #street line# than the furthest #street wall#, or portion thereof, of an existing adjacent #building# on the same or an adjoining #zoning lot# located on the same #street# frontage that is both within 15 feet of the #street line# and within 25 feet of such #Quality Housing building#. Where such existing adjacent #building#, or portion thereof, has #street walls# located at varying depths, the #street wall# shall not be located closer to the #street line# than the furthest portion of such existing adjacent #street wall# that is at least five feet in width.

(3) On #corner lots#, the #street wall# regulations of (b)(1) or (b)(2), as applicable, shall apply along both #street# frontages, except that along one #street line# the #street wall# need not be located farther from the #street line# than five feet.

R8A R8X R9A R9X R10A R10X

(c) In the districts indicated, for all #buildings#, and for #Quality Housing buildings# in R8 or R9 Districts without a letter suffix, and in other R10 Districts, the following shall apply:

(1) Along #wide streets# and along #narrow streets# within 50 feet of their intersection with a #wide street# the #street wall# shall extend along the entire #street# frontage of a #zoning lot#. At least 70 percent of the #aggregate width of street walls# shall be located within eight feet of the #street line# and extend to at least the minimum base height specified in Section 23-662 (Maximum height of buildings and setback regulations), or the height of the #building#, whichever is less. Up to 30 percent of the #aggregate width of street walls# may be recessed beyond eight feet of the #street line#, provided that any such recesses deeper than 10 feet along a #wide street# or 15 feet along a #narrow street# are located within an #outer court#.

(2) Along #narrow streets# beyond 50 feet of their intersection with a #wide street#, at least 70 percent of the #street wall# shall be located within 15 feet of the #street line#.

R6 R7 R8 R9 R10

(d) #Street wall# articulation, including, but not limited to, window recesses and structural expression on the #building# facade, shall be permitted to project or recess beyond the #street wall# locations established in paragraphs (a), (b) or (c) of this Section, provided such articulation does not exceed a depth or projection of 12 inches. In addition, to accommodate other forms of #street wall# articulation, such as bay windows, and facade recesses, up to 50 percent of the #aggregate width of street wall#, at any level, may recess or project beyond such #street wall# location provisions of this Section, provided that no such recess or projection exceeds a depth of three feet, as measured perpendicular to the #street wall#, or portion thereof. No projection shall extend beyond the #street line#, except where encroachments into the public right-of-way are permitted by the New York City Administrative Code.

23-662 - Maximum height of buildings and setback regulations

LAST AMENDED
3/22/2016

R6 R7 R8 R9 R10

In the districts indicated, height and setback regulations for #Quality Housing buildings# are set forth in this Section.

The height of a #Quality Housing building# #or other structure# shall not exceed the maximum height limit specified for the applicable district set forth in paragraphs (a) or (b) of this Section, as applicable, except as specified elsewhere in this Chapter.

Basic #building# heights for #Quality Housing buildings# are set forth in paragraph (a) of this Section. Such heights may be increased in certain districts for #Quality Housing buildings# with #qualifying ground floors# pursuant to paragraph (b)(1) of this Section. For #Quality Housing buildings# with #qualifying ground floors# in R6A, R6B, R7A, R7D, R7X, R8A, R8X, R9X or R10A Districts located outside the #Manhattan Core#, supplemental ground floor provisions are set forth in paragraph (b)(2) of this Section.

A setback is required for all portions of #buildings or other structures# that exceed the maximum base height specified for the applicable district in paragraphs (a) or (b) of this Section, and shall be provided in accordance with paragraph (c) of this Section.

(a) Basic #building# heights

Table 1 in this paragraph sets forth the minimum and maximum base height, and maximum #building# height, for #Quality Housing buildings#.

TABLE 1

MINIMUM BASE HEIGHT, MAXIMUM BASE HEIGHT, AND MAXIMUM BUILDING HEIGHT - FOR CONTEXTUAL

DISTRICTS

District	Minimum Base Height (in feet)	Maximum Base Height (in feet)	Maximum Height of #Buildings or other Structures# (in feet)
R6A	40	60	70
R6B	30	40	50
R7A	40	65	80
R7B	40	65	75
R7D	60	85	100
R7X inside #Manhattan Core#	60	85	125
R7X outside #Manhattan Core#	60	85	120
R8A	60	85	120
R8B	55	65	75
R8X	60	85	150
R9A[1]	60	105	145
R9A[2]	60	95	135
R9D	60	85[4]	N/A[3]
R9X[1]	105	120	170
R9X[2]	60	120	160
R10A[1]	125	150	210
R10A[2]	60	125	185

R10X	60	85	N/A[3]

MINIMUM BASE HEIGHT, MAXIMUM BASE HEIGHT, AND MAXIMUM BUILDING HEIGHT - FOR NON-CONTEXTUAL DISTRICTS

District	Minimum Base Height (in feet)	Maximum Base Height (in feet)	Maximum Height of #Buildings or other Structures# (in feet)
R6[2]	30	45	55
R6[1] inside #Manhattan Core#	40	55	65
R6[1] outside #Manhattan Core#	40	65	70
R7[1] inside #Manhattan Core# R7[2]	40	65	75
R7[1] outside #Manhattan Core#	40	75	80
R8[2]	60	85	115
R8[1] inside #Manhattan Core#	60	85	120
R8[1] outside #Manhattan Core#	60	95	130
R9[1]	60	105	145
R9[2]	60	95	135
R10[1]	125	155	210
R10[2]	60	125	185

[1] For #zoning lots# or portions thereof within 100 feet of a #wide street#

[2] For #zoning lots# or portions thereof on a #narrow street# beyond 100 feet of a #wide street# or, for #zoning lots# with only #wide street# frontage, portions of such #zoning lot# beyond 100 feet of the #street line#

[3] #Buildings or other structures# may exceed a maximum base height of 85 feet in accordance with Section 23-663 (Tower regulations in R9D and R10X Districts)

[4] For #buildings or other structures# that front upon an elevated rail line, the maximum base height shall be 25 feet

(b) Special heights in certain districts for #Quality Housing buildings# with #qualifying ground floors#

(1) Eligible buildings

Table 2 in this paragraph sets forth the minimum and maximum base height, maximum #building# height, and maximum number of #stories# for #Quality Housing buildings# with #qualifying ground floors# within:

(i) R6 or R7 Districts without a letter suffix outside the #Manhattan Core# and within 100 feet of a #wide street#, or R8 or R10 Districts without a letter suffix within 100 feet of a #wide street#; or

(ii) R6A, R6B, R7A, R7D, R7X, R8A, R8X, R9X or R10A Districts located outside the #Manhattan Core#.

TABLE 2

MINIMUM BASE HEIGHT, MAXIMUM BASE HEIGHT, MAXIMUM BUILDING HEIGHT AND MAXIMUM NUMBER OF STORIES FOR BUILDINGS IN CERTAIN DISTRICTS OUTSIDE THE MANHATTAN CORE WITH QUALIFYING GROUND FLOORS

FOR CONTEXTUAL DISTRICTS OUTSIDE THE MANHATTAN CORE				
District	Minimum Base Height (in feet)	Maximum Base Height (in feet)	Maximum Height of #Buildings or other Structures# (in feet)	Maximum Number of #Stories#
R6A	40	65	75	7
R6B	30	45	55	5
R7A	40	75	85	8
R7D	60	85	105	10
R7X	60	95	125	12
R8A	60	95	125	12

R8X	60	95	155	15
R9X[1]	105	125	175	17
R9X[2]	60	125	165	16
R10A[1]	125	155	215	21

FOR NON-CONTEXTUAL DISTRICTS				
District	Minimum Base Height (in feet)	Maximum Base Height (in feet)	Maximum Height of #Buildings or other Structures# (in feet)	Maximum Number of #Stories#
R6[1] outside #Manhattan Core#	40	65	75	7
R7[1] outside #Manhattan Core#	40	75	85	8
R8[1] inside #Manhattan Core#	60	85	125	12
R8[1] outside #Manhattan Core#	60	95	135	13
R10[1]	125	155	215	21

1 For #zoning lots# or portions thereof within 100 feet of a #wide street#

2 For #zoning lots# or portions thereof on a #narrow street# beyond 100 feet of a #wide street# and, for #zoning lots# with only #wide street# frontage, portions of such #zoning lot# beyond 100 feet of the #street line#

(2) Supplemental ground floor provisions for #buildings# in certain districts

For #Quality Housing buildings# in R6A, R6B, R7A, R7D, R7X, R8A, R8X, R9X or R10A Districts located outside the #Manhattan Core#, supplemental ground floor provisions shall apply as follows:

(i) Along typical #street wall# frontages

For #buildings#, or portions thereof, with a #street wall# width of 100 feet or less along a #street# frontage, #uses# on the first #story# shall comply with the ground floor #use# and depth requirements of Section 26-52. #Accessory# off-street parking spaces on the ground floor shall be wrapped in accordance with the provisions of paragraph (a) of Section 26-54 (Parking Wrap and Screening Requirements).

(ii) Along wide #street# frontages

For #buildings# with a #street wall# width exceeding 100 feet along a #street# frontage, at least 100 feet of such frontage shall comply with the provisions of paragraph (b)(2)(i) of this Section. For portions in excess of 100 feet, #accessory# off-street parking spaces on the ground floor level shall be wrapped or screened in accordance with Section 26-54. However, the aggregate width of any such screening, excluding entrances and exits, shall not exceed 50 feet.

(c) Setback requirements

For all #Quality Housing buildings#, a setback shall be provided in accordance with the following regulations:

(1) At a height not lower than the minimum base height or higher than the maximum base height specified for the applicable district in paragraph (b) of this Section, a setback with a depth of at least 10 feet shall be provided from any #street wall# fronting on a #wide street#, and a setback with a depth of at least 15 feet shall be provided from any #street wall# fronting on a #narrow street#.

(2) The depth of such required setback may be reduced by one foot for every foot that the #street wall# is located beyond the #street line#, but in no event shall a setback of less than seven feet in depth be provided, except as otherwise set forth in this Section. To allow #street wall# articulation, where a #street wall# is divided into different segments and located at varying depths from the #street line#, such permitted setback reduction may be applied to each #street wall# portion separately.

(3) Notwithstanding the provisions of paragraph (c)(2) above, the depth of such setbacks may include the depth of recesses or #outer courts# in the #street wall# of the #building# base, provided that the aggregate width of any such recessed portion of a #street wall# with a setback less than seven feet, as applicable, does not exceed 30 percent of the #aggregate width of street wall# at any level.

(4) These setback provisions are optional for any #building# wall that either is located beyond 50 feet of a #street line#, or oriented so that lines drawn perpendicular to it, in plan, would intersect a #street line# at an angle of 65 degrees or less. In the case of an irregular #street line#, the line connecting the most extreme points of intersection shall be deemed to be the #street line#. Furthermore, dormers provided in accordance with the provisions of Section 23-621 (Permitted obstructions in certain districts) may penetrate a required setback area.

(5) In R9D Districts, for #buildings or other structures# on #zoning lots# that front upon an elevated rail line, at a height between grade level and 25 feet, a setback with a depth of at least 20 feet shall be provided from the #street line# fronting on such elevated rail line. The depth of such setback may be reduced by one foot for every foot that the depth of the #zoning lot#, measured perpendicular to the elevated rail line, is less than 110 feet, but in no event shall a setback less than 10 feet in depth be provided.

23-663 - Tower regulations in R9D and R10X Districts

LAST AMENDED
12/6/2023

R9D R10X

In the districts indicated, any #Quality Housing building# #or other structure#, or portions thereof, which in the aggregate occupies not more than 40 percent of the #lot area# of a #zoning lot# (or, for #zoning lots# of less than 20,000 square feet, the percentage set forth in the table in Section 23-651), above a height of 85 feet above the #base plane#, is hereinafter referred to as a tower. Dormers permitted within a required setback area pursuant to Section 23-623 (Permitted obstructions in certain districts) shall not be counted towards tower coverage. Such tower may exceed a height limit of 85 feet above the #base plane# provided the base of such tower complies with the applicable #street wall# location and height and setback provisions of Sections 23-661 and 23-662, respectively, and provided that the tower portion complies with the following, as applicable:

(a) at all levels, such tower shall be set back from the #street wall# of a base at least 15 feet along a #narrow street# and at least 10 feet along a #wide street#, except such dimensions may include the depth of any permitted recesses in the #street wall#;

(b) the minimum coverage of such tower above a height of 85 feet above the #base plane# is at least 33 percent of the #lot area# of the #zoning lot#; however, such minimum coverage requirement shall not apply to the highest 40 feet of such tower;

(c) in R9D Districts, the highest four #stories#, or as many #stories# as are located entirely above a height of 165 feet, whichever is less, shall have a #lot coverage# of between 50 percent and 80 percent of the #story# immediately below such #stories#. Such reduced #lot coverage# shall be achieved by one or more setbacks on each face of the tower, where at least one setback on each tower face has a depth of at least four feet, and a width that, individually or in the aggregate, is equal to at least 10 percent of the width of such respective tower face. For the purposes of this paragraph (c), each tower shall have four tower faces, with each face being the side of a rectangle within which the outermost walls of the highest #story# not subject to the reduced #lot coverage# provisions have been inscribed. The required setbacks shall be measured from the outermost walls of the #building#, perpendicular to each tower face. Required setback areas may overlap; and

(d) in R9D Districts, for towers fronting on elevated rail lines, the outermost walls of each #story# located entirely above a height of 85 feet shall be inscribed within a rectangle. The maximum length of any side of such rectangle that is parallel to, or within 45 degrees of being parallel to, such elevated rail line shall be 125 feet, or 75 percent of the frontage of the #zoning lot# along such elevated rail line, whichever is less.

23-664 - Modified height and setback regulations for certain Inclusionary Housing buildings or affordable independent residences for seniors

LAST AMENDED
2/14/2018

R6 R7 R8 R9 R10

In the districts indicated, the provisions of this Section shall apply to #Quality Housing buildings# on #zoning lots# meeting the criteria set forth in paragraph (a) of this Section. For the purposes of this Section, defined terms include those set forth in Sections 12-10 and 23-911. Additional height and setback provisions for #compensated developments# and #MIH developments#, as defined in Section 23-911, are set forth in Sections 23-951 and 23-952, respectively.

(a) Eligible #buildings#

The additional heights and number of #stories# permitted pursuant to this Section shall apply to:

(1) #buildings# on #zoning lots# in R10 Districts outside of #Inclusionary Housing designated areas#, where:

(i) in accordance with the provisions of paragraph (a) of Section 23-154 (Inclusionary Housing), the #zoning lot# achieves a #floor area ratio# of at least 11.0; and

(ii) such #zoning lot# includes a #compensated development# that contains #affordable floor area#;

(2) #buildings# on #zoning lots# in #Inclusionary Housing designated areas#, where:

(i) 50 percent or more of the #floor area# of the #zoning lot# contains #residential uses#; and

(ii) at least 20 percent of such #residential# #floor area# is #affordable floor area# provided in accordance with the provisions of paragraph (b) of Section 23-154;

(3) #MIH developments# on #MIH zoning lots# that also contain #MIH sites#, where such #MIH zoning lot# contains all #affordable floor area# required for such #MIH development#; or

(4) #buildings# on #zoning lots# where at least 20 percent of the #floor area# of the #zoning lot# contains #affordable independent residences for seniors#.

(b) For certain #Quality Housing buildings# in all applicable districts

For #Quality Housing buildings# meeting the criteria of paragraph (a) of this Section, the maximum base and #building# heights and maximum number of #stories# established in Section 23-662 shall be modified by Table 1 below. Separate maximum #building# heights are set forth within the table for #Quality Housing buildings# with #qualifying ground floors# and for those with #non-qualifying ground floors#.

TABLE 1

MODIFIED MAXIMUM BASE HEIGHT AND MAXIMUM BUILDING HEIGHT FOR CERTAIN QUALITY HOUSING BUILDINGS

FOR CONTEXTUAL DISTRICTS

District	Minimum Base Height (in feet)	Maximum Base Height (in feet)	Maximum Height for #Buildings or other Structures# with #non-qualifying ground floors# (in feet)	Maximum Height for #Buildings or other Structures# with #qualifying ground floors# (in feet)	Maximum Number of #Stories#
R6A	40	65	80	85	8
R7A	40	75	90	95	9
R7D	60	95	110	115	11
R7X[1]	60	105	140	145	14
R8A	60	105	140	145	14

R8X	60	105	170	175	17
R9A[2]	60	125	170	175	17
R9A[3]	60	125	160	165	16
R9X[2]	105	145	200	205	20
R9X[3]	60	145	190	195	19
R10A[2]	125	155	230	235	23
R10A[3]	60	155	210	215	21

FOR NON-CONTEXTUAL DISTRICTS

District	Minimum Base Height (in feet)	Maximum Base Height (in feet)	Maximum Height for #Buildings or other Structures# with #non-qualifying ground floors# (in feet)	Maximum Height for #Buildings or other Structures# with #qualifying ground floors# (in feet)	Maximum Number of #Stories#
R6[4]	40	65	80	85	8
R7[2]	40	75	100	105	10
R7[5]	40	75	90	95	9
R8	60	105	140	145	14
R9[2]	60	125	170	175	17
R9[3]	60	125	160	165	16
R10[2]	125	155	230	235	23
R10[3]	60	155	210	215	21

[1] In R7X Districts, the modified base heights, maximum #building# heights and number of #stories# are permitted only for #buildings# on #zoning lots# meeting the criteria of paragraphs (a)(3) or (a)(4) of this Section

[2] For #zoning lots# or portions thereof within 100 feet of a #wide street#

[3] For #zoning lots# or portions thereof on a #narrow street# beyond 100 feet of a #wide street#, or for #zoning lots# with only #wide street# frontage, portions of such #zoning lot# beyond 100 feet of the #street line#

[4] For #buildings# meeting the criteria of paragraph (a)(4) of this Section, and #buildings# meeting the other criteria of paragraph (a) of this Section on #zoning lots# located within 100 feet of a #wide street#

[5] For #buildings# meeting the criteria of paragraph (a)(4) of this Section, on #zoning lots# or portions thereof on a #narrow street# beyond 100 feet of a #wide street#, and for #zoning lots# with only #wide street# frontage, portions of such #zoning lot# beyond 100 feet of the #street line#

(c) Alternative regulations for certain #Quality Housing buildings# in non-contextual districts

For #Quality Housing buildings# in R6 through R8 Districts without a letter suffix and in an R9-1 District, the #street wall# location provisions of Sections 23-661 and the height and setback provisions of Section 23-662 and paragraph (b) of this Section need not apply to:

(1) #buildings# on #MIH zoning lots# meeting the criteria of paragraph (a)(3) of this Section.

(2) #buildings# on #zoning lots# containing an #affordable independent residence for seniors# meeting the criteria of paragraph (a)(4) of this Section, where such #zoning lot# is located within 150 feet of the following types of transportation infrastructure:

(i) an elevated rail line;

(ii) an open railroad right of way;

(iii) a limited-access expressway, freeway, parkway or highway, all of which prohibit direct vehicular access to adjoining land; or

(iv) an elevated #street# located on a bridge that prohibits direct vehicular access.

Such 150-foot measurement shall be measured perpendicular from the edge of such infrastructure.

In lieu thereof, the height of a #building or other structure#, or portion thereof, within 10 feet of a #wide street# or 15 feet of a #narrow street#, shall not exceed the maximum base height specified for the applicable zoning district in Table 2 below. Beyond 10 feet of a #wide street# and 15 feet of a #narrow street#, the height of the #building or other structure# shall not exceed the maximum #building# height specified for the applicable district in the table, or the maximum number of #stories#, whichever is less.

TABLE 2

ALTERNATIVE MAXIMUM BASE HEIGHT AND MAXIMUM BUILDING HEIGHT FOR CERTAIN QUALITY HOUSING BUILDINGS IN NON-CONTEXTUAL DISTRICTS

District	Maximum Base Height (in feet)	Maximum Height of #Buildings or other Structures# (in feet)	Maximum Number of #Stories#
R6	65	115	11

R7	75	135	13
R8	105	215	21
R9-1	125	285	28

23-665 - Additional regulations

LAST AMENDED
3/22/2016

R6 R7 R8 R9 R10

In the districts indicated, for all #Quality Housing buildings#, the following additional regulations shall apply:

(a) Existing #buildings# may be vertically #enlarged# by up to one #story# or 15 feet without regard to the #street wall# location requirements of Section 23-661.

(b) On #through lots# which extend less than 180 feet in maximum depth from #street# to #street#, the #street wall# location requirements of Section 23-661 shall be mandatory along only one #street# frontage.

(c) The #street wall# location and minimum base height provisions of Sections 23-661 and 23-662, respectively, shall not apply along any #street# frontage of a #zoning lot# occupied by #buildings# whose #street wall# heights or widths will remain unaltered.

(d) The minimum base height provisions of Section 23-662 shall not apply to #buildings# #developed# or #enlarged# after February 2, 2011, that do not exceed such minimum base heights, except where such #buildings# are located on #zoning lots# with multiple #buildings#, one or more of which is #developed#, #enlarged# or altered after February 2, 2011, to a height exceeding such minimum base heights.

(e) The City Planning Commission may, upon application, authorize modifications in the required #street wall# location if the Commission finds that existing #buildings#, or existing open areas serving existing #buildings# to remain on the #zoning lot#, would be adversely affected by the location of the #street walls# in the manner prescribed in Section 23-661.

(f) For any #zoning lot# located in a Historic District designated by the Landmarks Preservation Commission, the #street wall# location and minimum base height regulations of Sections 23-661 and 23-662, respectively, or as modified in any applicable Special District, shall be modified as follows:

(1) The minimum base height of a #street wall# may vary between the height of the #street wall# of an adjacent #building# before setback, if such height is lower than the minimum base height required, up to the minimum base height requirements of Section 23-661, or as modified in any applicable Special District.

(2) The maximum base height of a #street wall# may vary between the height of the #street wall# of an adjacent #building# before setback, if such height is higher than the maximum base height allowed, and the maximum base height requirements of this Section, provided that such height not exceed 150 feet and provided such #zoning lot# is located within the area bounded by West 22nd Street, a line 100 feet west of Fifth Avenue, a line midway between West 16th Street and West 17th Street, and a line 100 feet east of Sixth Avenue.

(3) The location of the #street wall# of any #building# may vary between the #street wall# location requirements of Section 23-661, or as modified in any applicable Special District, and the location of the #street wall# of an adjacent #building# fronting on the same #street line#.

(g) In R9D Districts, where a #building# on an adjacent #zoning lot# has #dwelling unit# windows located within 30 feet of a #side lot line# of the #development# or #enlargement#, an open area extending along the entire length of such #side lot line# with a minimum width of 15 feet shall be provided. Such open area may be obstructed only by the permitted obstructions set forth in Section 23-44 (Permitted Obstructions in Required Yards or Rear Yard Equivalents).

(h) For the purposes of applying the #street wall# location as well as the height and setback provisions of Sections 23-661 and 23-662, respectively, where the Administrative Code establishes restrictions on the location of #buildings# on lots fronting upon and within 30 feet of Eastern Parkway in Community Districts 8 and 9 in the Borough of Brooklyn, lines drawn 30 feet north of and 30 feet south of, and parallel to, Eastern Parkway shall be considered the northern and southern #street lines# of Eastern Parkway.

23-67 - Special Height and Setback Provisions for Certain Areas

LAST AMENDED
3/22/2016

23-671 - Special provisions for zoning lots directly adjoining public parks

LAST AMENDED
3/22/2016

R1 R2 R3 R4 R5 R6 R7 R8 R9 R10

In all districts, as indicated, a #public park# with an area of between one and 15 acres shall be considered a #wide street# for the purpose of applying the regulations set forth in Sections 23-63 (Height and Setback in R1 Through R5 Districts), 23-64 (Basic Height and Setback Requirements) and 23-66 (Height and Setback Requirements for Quality Housing Buildings) to any #building or other structure# on a #zoning lot# adjoining such #public park#. However, the provisions of this Section shall not apply to a #public park# more than 75 percent of which is paved.

23-672 - Special height and setback regulations in R10 Districts within Community District 7, Borough of Manhattan

LAST AMENDED
3/22/2016

Within the boundaries of Community District 7 in the Borough of Manhattan, all #buildings or other structures# located in R10 Districts, except R10A or R10X Districts, utilizing the basic height and setback requirements of Section 23-64 (Basic Height and Setback Requirements), shall also comply with the provisions of this Section.

The front #building# wall of all #buildings# on a #zoning lot# with any frontage on a #wide street#, shall extend along the entire #wide street# frontage of the #zoning lot# without a setback for a height of 125 feet above the #curb level# or the full height of the #building#, whichever is less. Above a height of 125 feet, the front #building# wall may be set back at least 10 feet on a #wide street# or 15 feet on a #narrow street#. Above a height of 150 feet, the front #building# wall shall be set back at least 10 feet. These mandatory front #building# wall requirements also apply to all #buildings# along all #street lines# of #narrow streets# within 50 feet of their intersection with the #street lines# of #wide streets#. For the next 20 feet along the #street line# of a #narrow street#, the mandatory front #building# wall requirements are optional. The height and setback regulations of the underlying district shall apply along #street lines#, or portions thereof, not subject to the front #building# wall requirements.

Front wall recesses are permitted above the level of the second #story# ceiling or 23 feet above #curb level#, whichever is less, provided that the aggregate width of all recesses at the level of any #story# does not exceed 50 percent of the width of the front wall. The depth of such recess shall not exceed 10 feet. No front wall recesses are permitted within 20 feet of the intersection of two #street lines#.

Front wall openings are permitted below the level of the second #story# ceiling, for entrances only.

The preceding #street wall# location provisions shall not apply along any #street# frontage of a #zoning lot# occupied by existing #buildings# whose #street walls# remain unaffected by alterations or #enlargements# to such existing #buildings#.

However, the provisions of this Section shall not apply to any #building# for which the City Planning Commission has granted a special permit pursuant to Section 74-95 (Modifications of Housing Quality Special Permits) nor shall it apply to any #building# located within the #Special Lincoln Square District# or within the former West Side Urban Renewal Area, excluding frontages along Central Park West or to the #block# bounded by Frederick Douglass Circle, Cathedral Parkway, Manhattan Avenue, West 109th Street and Central Park West. On application, the Commission may grant special authorization for minor modifications of the mandatory front wall provisions of this Section involving an #enlargement#, upon a showing of compelling necessity. Such authorization, however, may in no event include modification of permitted #floor area# regulations.

23-673 - Special bulk regulations for certain sites in Community District 4, Borough of Manhattan

LAST AMENDED
3/22/2016

Within the boundaries of Community District 4 in the Borough of Manhattan, excluding the #Special Clinton District#, for #developments# or #enlargements# in R8 Districts without a letter suffix, on #zoning lots# larger than 1.5 acres that include #residences# for which #public funding#, as defined in Section 23-911 (General definitions) is committed to be provided, the City Planning Commission may authorize modifications of height and setback regulations, provided the Commission finds that such modifications will facilitate the provision of such #residences#, and such modifications will not unduly obstruct access of light and air to the detriment of the occupants or users of #buildings# on the #zoning lot# or nearby properties, #open space# or #streets#. Prior to issuing a building permit for any #development# or #enlargement# utilizing modifications granted by this authorization, the Department of Buildings shall be furnished with written notice of a commitment from the appropriate funding agency for the provision of such #public funding#.

The Commission may prescribe appropriate conditions and safeguards to minimize adverse effects on the character of the surrounding area.

23-674 - Special height and setback regulations for certain sites in Community District 9, Borough of Manhattan

LAST AMENDED
3/22/2016

Within the boundaries of Community District 9 in the Borough of Manhattan, all #buildings# located in R8 Districts north of West 125th Street shall be #developed# or #enlarged# pursuant to the Quality Housing Program. The underlying #bulk# regulations for #Quality Housing buildings# shall apply, except as follows:

(a) the maximum height of a #building or other structure# set forth in Section 23-662 shall be modified so that the maximum height of a #building or other structure#, or portion thereof, within 100 feet of a #wide street# shall be 120 feet, and the maximum height of a #building or other structure#, or portion thereof, on a #narrow street# beyond 100 feet of a #wide street# shall be 105 feet; and

(b) the alternate height and setback regulations for certain #Quality Housing buildings# in non-contextual districts, as set forth in paragraph (c) of Section 23-664 (Modified height and setback regulations for certain Inclusionary Housing buildings or affordable independent residences for seniors) shall not apply to #buildings# on #zoning lots# meeting the criteria set forth in paragraph (a) of Section 23-664.

23-675 - Provisions for certain R10 Districts within Community District 6 in the Borough of Manhattan

LAST AMENDED
11/30/2017

In Community District 6 in the Borough of Manhattan, for #buildings developed# or #enlarged# with towers in R10 Districts located east of First Avenue and north of East 51st Street, the tower provisions of paragraph (a) of Section 23-65 (Tower Regulations) shall be modified to require that the tower-on-a-base provisions of Section 23-651 apply to all #buildings# where more than 25 percent of the total #floor area# of the #building# is allocated to #residential uses#. However, for #zoning lots# with #narrow street# frontages, such provisions shall be modified in accordance with the provisions of this Section.

(a) Tower modifications

The tower regulations of paragraph (a) of Section 23-651 shall be modified as follows:

(1) For #buildings# that do not meet the location criteria of paragraph (a)(2) of Section 23-65, the provisions of paragraph (a)(3) of Section 23-651 shall be modified to require at least 45 percent of the total #floor area# permitted on the #zoning lot# to be located in #stories# located either partially or entirely below a height of 150 feet. In addition, when the #lot coverage# of the tower is less than 40 percent, the required 45 percent of the total #floor area# distribution, within a height of 150 feet, shall be increased in accordance with the following requirement:

Percent of #lot coverage# of the tower portion	Minimum percent of total #building floor area# distribution below the level of 150 feet
40.0 or greater	45.0
39.0 to 39.9	45.5
38.0 to 38.9	46.0
37.0 to 37.9	46.5
36.0 to 36.9	47.0
35.0 to 35.9	47.5
34.0 to 34.9	48.0
33.0 to 33.9	48.5
32.0 to 32.9	49.0

31.0 to 31.9	49.5
30.0 to 30.9	50.0

(2) For #buildings# that do not meet the location criteria of paragraph (a)(2) of Section 23-65, the tower setback provisions of paragraph (a)(4) of Section 23-651 shall be modified to permit such required setback along a #narrow street# to be reduced by one foot for every foot that the #street wall# is located beyond the #street line#. However, in no event shall a setback of less than seven feet in depth be provided.

(3) The tower location restrictions of paragraph (a)(5) of Section 23-651 shall not apply. In lieu thereof, towers shall be permitted on a #narrow street# beyond 100 feet of its intersection with a #wide street#.

(4) For the purposes of determining the permitted tower coverage and the required minimum distance between #buildings# or portions thereof on #zoning lots# with both #narrow street# and #wide street# frontage, that portion of a #zoning lot# located either within 125 feet from the #wide street# frontage along the short dimension of a #block# or within 100 feet from the #wide street# frontage along the long dimension of a #block#, shall be treated as a separate #zoning lot# from that portion beyond, with frontage along a #narrow street#.

(b) #Building# base modifications

The #building# base regulations of paragraph (b) of Section 23-651 shall be modified as follows:

(1) For #buildings#, or portions thereof, fronting on a #narrow street# beyond 125 feet of its intersection with a #wide street#, the #street wall# location provisions of paragraph (b)(1)(ii) of Section 23-651 shall be modified to require that at least 70 percent of the #aggregate width of street walls# in the #building# base be located within eight feet of the #street line#.

(2) For #buildings#, or portions thereof, fronting on a #narrow street# beyond 100 feet of its intersection with a #wide street#, the height of #street wall# provisions of paragraph (b)(2)(ii) of Section 23-651 shall be modified so that where the height of an adjacent #building# is between 60 feet and 85 feet, one of the three matching alternatives set forth in paragraphs (b)(2)(i)(a) through (b)(2)(i)(c) shall be applied.

(3) The dormer provisions of paragraph (b)(3) of Section 23-651 shall be modified to permit dormers on #narrow streets# beyond 70 feet of its intersection with a #wide street#.

23-68 - Special Provisions for Zoning Lots Divided by District Boundaries

LAST AMENDED
8/14/1987

R1 R2 R3 R4 R5 R6 R7 R8 R9 R10

In all districts, as indicated, whenever a #zoning lot# is divided by a boundary between districts, or is subject to other regulations resulting in different height and setback regulations, or whenever a #zoning lot# is divided by a boundary between a district to which the provisions of Section 23-65 (Tower Regulations) apply and a district to which such provisions do not apply, the provisions set forth in Article VII, Chapter 7, shall apply.

23-69 - Special Height Limitations

LAST AMENDED
6/29/1994

23-691 - Limited Height Districts

LAST AMENDED
6/29/1994

R1 R2 R3 R4 R5 R6 R7 R8 R9 R10

In all districts, as indicated, wherever such districts are located within a #Limited Height District#, the maximum height of a #building or other structure#, or portion thereof, shall be as shown in the following table:

#Limited Height District#	Maximum Height above #Curb Level# or #Base Plane#, as Applicable
LH-1	50 feet
LH-1A	60 feet
LH-2	70 feet
LH-3	100 feet

23-692 - Height limitations for narrow buildings or enlargements

LAST AMENDED
3/22/2016

R7-2 R7D R7X R8 R9 R10

In the districts indicated, portions of #buildings# with #street walls# less than 45 feet in width shall not be permitted above the following heights:

(a) For #interior lots#, and for #through lots#, which shall be treated as two separate #interior lots# of equal depth for the purposes of determining the height limitations of this Section, a height equal to the width of the #street# on which such #street walls# front or 100 feet, whichever is less;

(b) For #corner lots# bounded by only #narrow streets#, a height equal to the width of the narrowest of such #streets# on which such #street walls# front;

(c) For #corner lots# bounded by at least one #wide street#, a height equal to the width of the #widest street# on which it fronts, or 100 feet, whichever is less;

(d) The heights permitted in paragraphs (a), (b) or (c) of this Section may be exceeded if:

(1) on a #wide street#, such portion of a #building# with a #street wall# less than 45 feet in width #abuts# an existing #building# with a #street wall# that exceeds such permitted heights. Such new #street walls# may reach the height of such #abutting building# or, where there are two #abutting# #buildings# that exceed such heights, such new #street wall# may reach the height of the tallest of such #abutting# #buildings#; or

(2) on a #narrow street#, such #street walls# #abut# two existing #buildings# with #street walls# that both exceed the heights permitted. Such new #street walls# may reach the height of the lowest of such #abutting buildings#; and

(3) such new #street walls# shall be fully contiguous at every level with such #abutting# #street walls#.

(e) In addition, the following rules shall apply:

(1) The front height and setback regulations and any height limitations of the underlying district shall apply, except that the

alternate front setback and tower regulations of Sections 23-642, 23-65, 24-53, 24-54, 33-44 and 33-45 shall not apply. In the event of a conflict between the underlying regulations and the regulations of this Section, the more restrictive shall apply.

(2) The provisions of this Section shall not apply to #street walls# of permitted obstructions or #street walls# located beyond 100 feet of a #street line#.

(3) For the purposes of determining the width of a #street wall# :

(i) the width shall be the sum of the maximum widths of all #street walls# of a #building# at every level. The width of a #street wall# shall be the length of the #street line# from which, when viewed directly from above, lines perpendicular to the #street line# may be drawn to such #street wall#;

(ii) #abutting# #buildings# on a single #zoning lot# may be considered a single #building#, except as set forth in paragraph (e)(6) of this Section.

(4) For #buildings# with #street walls# less than 45 feet in width that front only on a #narrow street# and #abut# two existing #buildings#, the #street wall# of such #building# shall be no closer to the #street line# than the #street wall# of the #abutting building# that is closest to the #street line#.

(5) On a #through lot# containing #buildings# with #street walls# less than 45 feet in width, the provisions of paragraphs (b) and (c) in Section 23-532 (Required rear yard equivalents) shall not apply.

(6) #Quality Housing buildings# shall be exempt from the provisions of this Section provided the width of the #street wall# at the maximum base height required by Sections 23-66 or 35-65 is at least 45 feet. For such #buildings#, a #street wall# that is less than 45 feet wide may be constructed above such base. For the purposes of this paragraph (e)(6), #abutting# #buildings# on a single #zoning lot# shall not be considered a single #building#. However, where all the requisite structural framing and all enclosing walls and roofs were completed for an #enlargement#, in accordance with a building permit issued prior to a September 11, 2007, Board of Standards and Appeals ruling (67-07-A) that resulted in the #enlargement# being ineligible for a certificate of occupancy, #abutting# #buildings# on a single #zoning lot# may be considered a single #building# provided such #zoning lot# is formed prior to August 2, 2011.

23-693 - Special provisions applying adjacent to R1 through R6B Districts

LAST AMENDED
3/22/2016

R6 R7 R8 R9 R10

In the districts indicated, within 25 feet of an R1 through R5 District or an R6B District, the height of a #development# or #enlargement# of a #building#, or portions thereof, shall not exceed the height set forth in the table below for the applicable district.

	Height permitted within 25 feet of	
District	R1 through R5 District, other than R5D District (in feet)	R5D or R6B District (in feet)
R6 R6A R7[1] R7B R8B	45	55
R7[2] R7A R7D	55	65
R7X R8 R8A R8X R9 R10	65	65

[1] For #zoning lots# or portions thereof on a #narrow street# beyond 100 feet of a #wide street# and, for #zoning lots# with only #wide street# frontage, portions of such #zoning lot# beyond 100 feet of the #street line#

[2] For #zoning lots# or portions thereof within 100 feet of a #wide street#