Zoning Resolution

THE CITY OF NEW YORK
Zohran K. Mamdani, Mayor

CITY PLANNING COMMISSION
Sideya Sherman, Chair

61-30 - DEFINITIONS

File generated by https://zr.planning.nyc.gov on 11/24/2026

61-30 - DEFINITIONS

LAST AMENDED
12/15/1961

Airport reference point (or points)

The "airport reference point" (or "points") is a point (or points) within the boundaries of each major airport, as indicated on the #flight obstruction area# maps for each such major airport. The point or points applicable to each major airport are set forth in Section 61-41 (Airport Reference Point, Established Elevation and Specified Radii).

Airport referenced imaginary surfaces

"Airport referenced imaginary surfaces" include the #horizontal surface#, the #conical surface#, the #approach surfaces# and the #transitional surfaces#.

Approach surfaces

The "approach surfaces" are imaginary inclined planes, trapezoidal in shape and located symmetrically with respect to the extended center line of any runway. Such #approach surfaces#, extending from both ends of any runway, consist of contiguous inner and outer sections whose dimensions are as follows:

(a) The plane of the inner section:

(1) begins at a line drawn parallel to, and at the same elevation as, the end of the runway, and at a distance, measured horizontally along the extended runway centerline, of 200 feet from the end of the runway;

(2) extends for a distance of 10,000 feet, measured horizontally along the extended runway centerline;

(3) has a width of 1,000 feet measured along the line described in paragraph (a)(1) of this Section, which increases uniformly (with respect to the extended runway centerline) to a width of 4,000 feet at the outer edge of such inner section, as described in paragraph (a)(2) of this Section; and

(4) rises at a slope of one foot in height for every 50 feet of horizontal distance.

(b) The plane of the outer section:

(1) begins at the outer edge of the inner section;

(2) extends for a distance of 15,000 feet, measured horizontally along the extended runway centerline;

(3) has a width of 4,000 feet commencing at the outer edge of the inner section, which increases uniformly (with respect to the extended runway center line) to a width of 8,500 feet at the outer edge of such outer section; and

(4) rises at a slope of one foot in height for every 40 feet of horizontal distance.

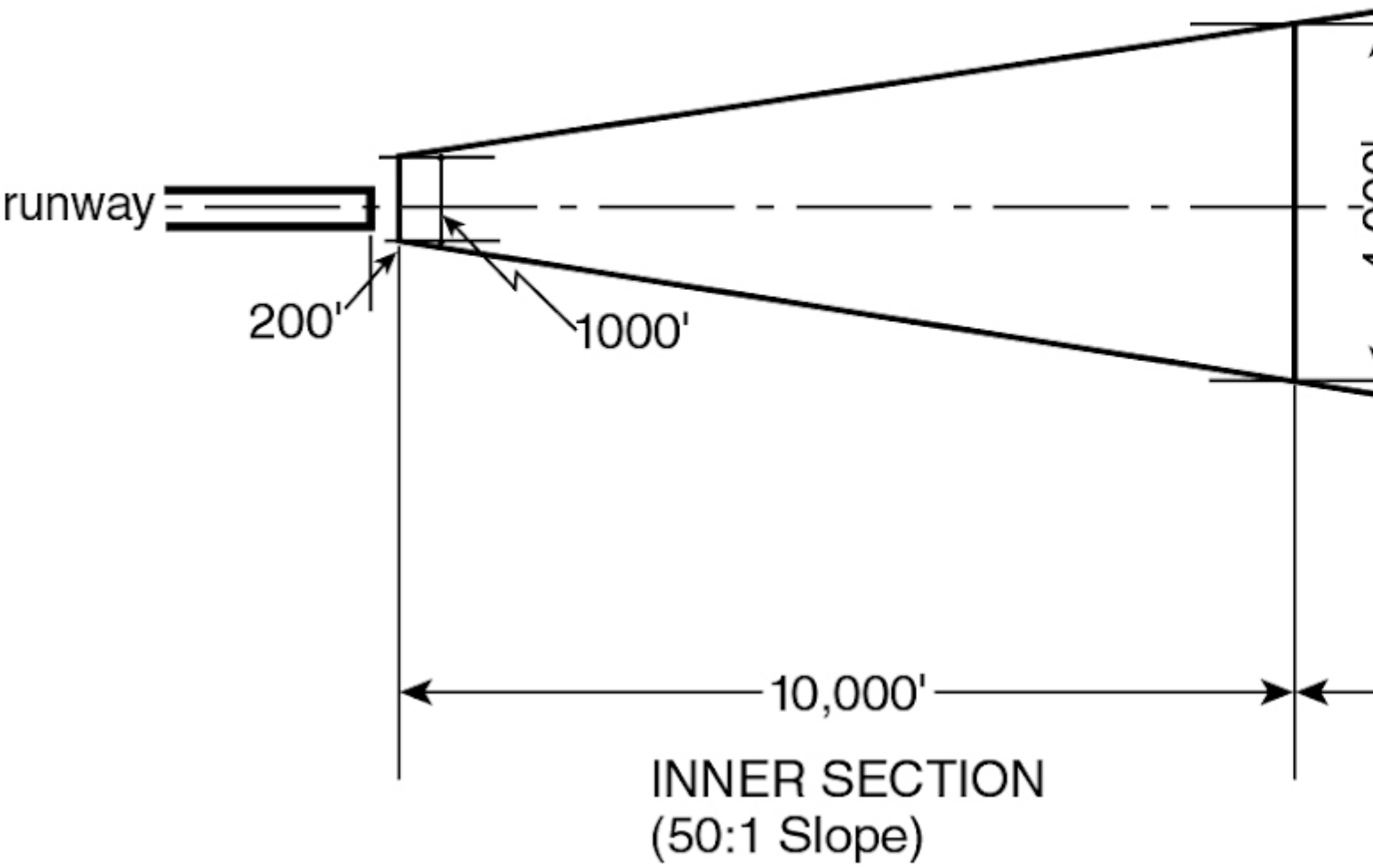

DESCRIPTION OF APPROACH SURFACE

Conical surface

The "conical surface" is an imaginary inclined surface extending upward and outward from the periphery of the #horizontal surface#, which:

(a) rises at a slope, measured in an imaginary vertical plane passing through the #airport reference point# (or #points#), of one foot for every 20 feet in horizontal distance; and

(b) is measured on a horizontal radius from the #airport reference point# (or #points#), and extends for a distance set forth in Section 61-41 (Airport Reference Point, Established Elevation and Specified Radii).

Established airport elevation

The "established airport elevation" is the elevation above mean sea level of the highest point of the usable airport landing area for any major airport. The elevation applicable to each major airport is set forth in Section 61-41 (Airport Reference Point, Established Elevation and Specified Radii).

Flight obstruction area

The "flight obstruction area" comprises all areas of land or water below the #airport referenced imaginary surfaces# for each airport.

Horizontal surface

The "horizontal surface" is an imaginary horizontal plane, circular or elliptical in shape, which:

(a) is located at a height of 150 feet above the #established airport elevation# for any major airport; and

(b) is measured on a horizontal radius from the #airport reference point# (or #points#), and extends for a distance set forth in Section 61-41 (Airport Reference Point, Established Elevation and Specified Radii).

Transitional surfaces

The "transitional surfaces" are imaginary inclined planes extending upward and outward from the side edges of all #approach surfaces#, and from lines parallel to, 500 feet from, and at the same level as the center line of each runway, which:

(a) rise at a slope of one foot in height for every seven feet of horizontal distance measured in a vertical plane at right angles to the center line of the runway; and

(b) extend to the point of intersection with the #horizontal surface# or the #conical surface#.