Zoning Resolution

THE CITY OF NEW YORK
Zohran K. Mamdani, Mayor

CITY PLANNING COMMISSION
Sideya Sherman, Chair

23-42 - Height and Setback Requirements in R1 Through R5 Districts

File generated by https://zr.planning.nyc.gov on 11/24/2026

23-42 - Height and Setback Requirements in R1 Through R5 Districts

LAST AMENDED
12/5/2024

R1 R2 R3 R4 R5

In the districts indicated, the height and setback regulations of a #building or other structure# shall be as set forth in Section 23-421 (Basic pitched-roof envelopes for certain districts) and 23-422 (Basic flat-roof envelopes for certain districts). Where applicable, standard setback provisions are set forth in Section 23-423.

Such heights may be increased on #qualifying residential sites# or on #zoning lots# containing #qualifying senior housing#, or for certain #large sites#, pursuant to Sections 23-424 or 23-425, respectively.

Additional provisions are set forth in Section 23-426 and Section 23-44, inclusive.

The height of all #buildings or other structures# shall be measured from the #base plane#. For the purposes of this Section, where #base planes# of different elevations apply to different portions of a #building or other structure#, each such portion of the #building# may be considered to be a separate #building#. Furthermore, for the purposes of this Section, #building segments# may be considered to be separate #buildings# and #abutting# #semi-detached# #buildings# may be considered to be one #building#.

23-421 - Basic pitched-roof envelopes for certain districts

LAST AMENDED

R1 R2 R3A R3X R3-1 R3-2 R4 R4-1 R4A R5A

In the districts indicated, the height and setback regulations for #single-# or #two-family# #detached#, #semi-detached#, or #zero lot line# #buildings or other structures#, where permitted, shall be set forth in this Section.

The perimeter walls of a #building or other structure# are those portions of the outermost walls enclosing the #floor area# within a #building or other structure# at any level and height is measured from the #base plane#. Perimeter walls are subject to setback regulations at a maximum height above the #base plane# of 25 feet.

Above these heights, sloping planes control the maximum height of the #building or other structure# requiring either a setback or a pitched roof. These planes start at the maximum permitted height of the perimeter walls and meet at a ridge line of 35 feet above the #base plane#. The exact locations of these planes are flexible and are determined in the following steps set forth in paragraphs (a) through (g):

(a) At a height of 35 feet above and parallel to the #base plane#, a plane is projected above the area enclosed by and including the perimeter walls of the #building or other structure#. A second plane (the perimeter wall plane) is projected in the same manner at a height of 25 feet above the #base plane#. (See Figure A)

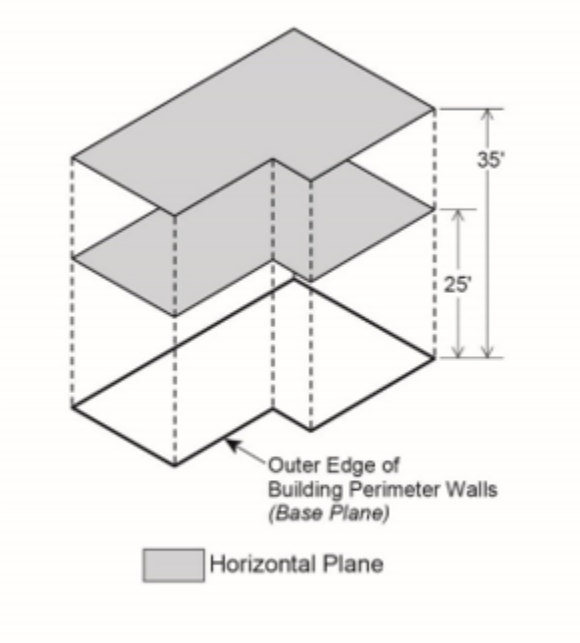

Figure A

(b) Each perimeter wall of the #building or other structure# with a horizontal dimension of eight feet or more which projects from an adjacent perimeter wall at least 18 inches may have an apex point directly above it on the 35-foot-high plane. (See Figure B). The location of the apex point is flexible provided it is directly above its perimeter wall and provided a line drawn from the intersection of two perimeter walls to such an apex point does not exceed 80 degrees to the horizontal. An apex point is not required for each qualifying perimeter wall; however, the maximum number of apex points above each such wall is one.

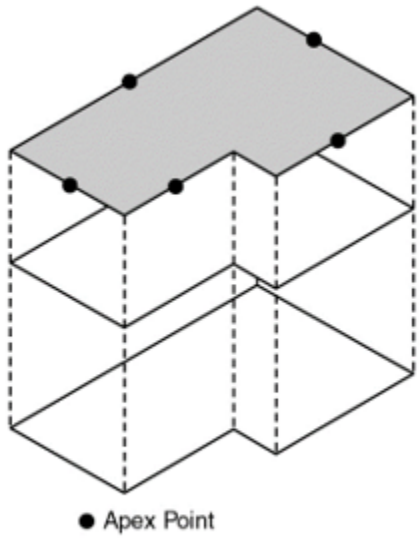

Figure B

(c) One “ridge line” is extended in a straight line from each apex point along the 35-foot-high plane. Ridge lines which connect two apex points may cross other ridge lines. Otherwise, ridge lines which extend from only one apex point must terminate at a point of intersection with another ridge line. (See Figure C)

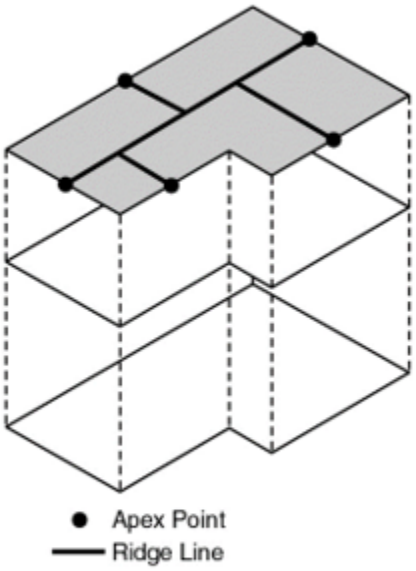

Figure C

(d) Sloping planes are extended in a straight line outward and downward from each ridge line until they intersect the perimeter wall plane. Every sloping plane generated must intersect the perimeter wall plane for the full width of the ridge line from which it extends. (See Figure D). The maximum angle of pitch for any sloping plane may not exceed 80 degrees to the horizontal. Sloping planes extended from ridge lines perpendicular or within 45 degrees of being perpendicular to each other may intersect, in which case the higher plane defines the limit of the envelope. Sloping planes extended from ridge lines parallel or within 45 degrees of being parallel to each other must intersect the perimeter wall plane without intersecting each other.

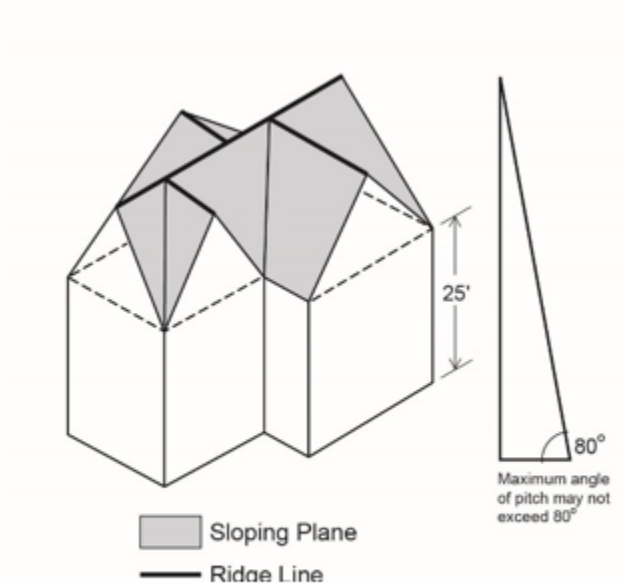

Figure D

(e) The perimeter walls are then extended vertically beyond the perimeter wall plane, up to the heights defined by the sloping planes generated in paragraph (d). (See Figure E). The perimeter walls of the #building or other structure#, the sloping planes and the perimeter wall extensions define the #building# envelope. (See Figure F).

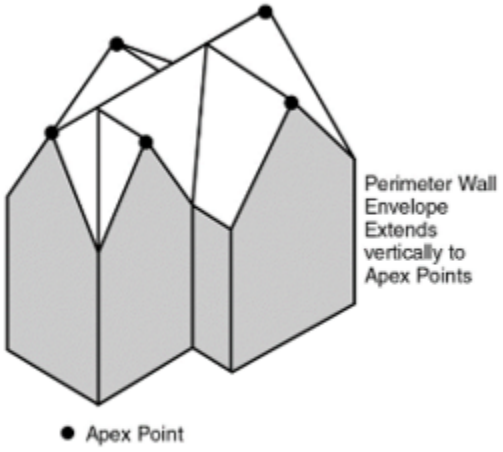

Figure E

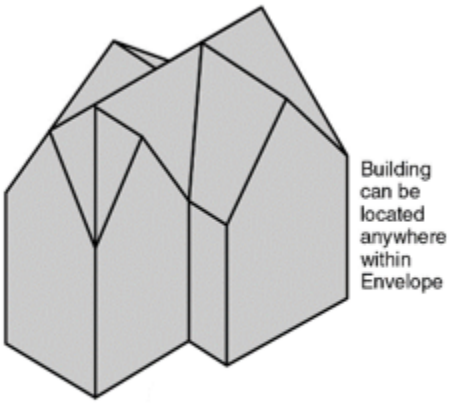

Figure F

(f) Special Situations

For convex curved perimeter walls, the #building or other structure# must be within a plane curve tapering uniformly to a vertex located at a height of 35 feet. For concave curved perimeter walls, the #building or other structure# must lie within a plane curve extending from the maximum perimeter wall height to a ridge line parallel to the prolongation of the perimeter wall at the 35-foot level. Such plane curves may not exceed a pitch of 80 degrees in relation to a plane drawn parallel to the #base plane# at the maximum height of the permitted perimeter wall. (See Figure G).

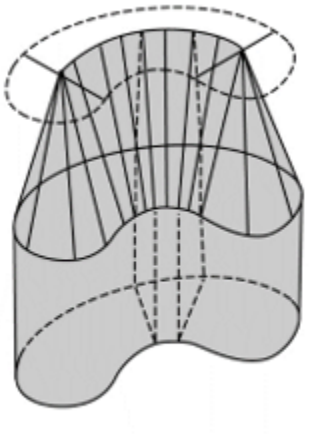

Figure G

(g) In R1 and R2 Districts without a letter suffix, for #zoning lots# that either:

(1) have a #lot area# of at least 9,500 square feet and #lot width# of at least 100 feet; or

(2) have a slope, as measured from the #street wall line level# to the #rear wall line level#, of at least five percent to the horizontal;

the reference plane for applying the regulations of this Section may be located up to five feet above the #base plane#.

23-422 - Basic flat-roof envelopes for certain districts

LAST AMENDED
12/5/2024

R3-2 R4 R4B R5 R5B R5D

In the districts indicated, the height and setback regulations for #buildings or other structures# shall be set forth in this Section.

R3-2 R4

(a) In the districts indicated, for #residences# not subject to the provisions of Section 23-421, the maximum #building# height shall be 35 feet.

R4B

(b) In the district indicated, the maximum #building# height shall be 25 feet.

R5B

(c) In the district indicated, the maximum #building# height shall be 35 feet.

R5

(d) In the district indicated, except R5 Districts with a letter suffix, the maximum base height shall be 35 feet, and the maximum #building# height shall be 45 feet. At a height not higher than the maximum base height, a setback shall be provided in accordance with Section 23-423.

R5D

(e) In the district indicated, the maximum #building# height shall be 45 feet.

23-423 - Standard setback regulations

LAST AMENDED
12/5/2024

Where minimum setback regulations are specific for a particular #building# envelope for a particular district, the following shall apply.

At a height not higher than the maximum base height specified for the applicable district, a setback with a depth of at least 10 feet shall be provided from any #street wall# fronting on a #wide street#, and a setback with a depth of at least 15 feet shall be provided from any #street wall# fronting on a #narrow street#. Such minimum setbacks may be modified as follows:

(a) The depth of such required setback may be reduced by one foot for every foot that the #street wall# is located beyond the minimum required #front yard#, but in no event shall a setback of less than seven feet in depth be provided, except as otherwise set forth in this Section. To allow #street wall# articulation, where a #street wall# is divided into different segments and located at varying depths from the #street line#, such permitted setback reduction may be applied to each #street wall# portion separately.

(b) The depth of such setbacks may include the depth of recesses or #outer courts# in the #street wall# of the #building# base, provided that the aggregate width of any such recessed portion of a #street wall# with a setback less than seven feet, as applicable, does not exceed 30 percent of the #aggregate width of street wall# at any level.

(c) These setback provisions are optional for any #building# wall that either is located beyond 50 feet of a #street line#, or oriented so that lines drawn perpendicular to it, in plan, would intersect a #street line# at an angle of 65 degrees or less. In the case of an irregular #street line#, the line connecting the most extreme points of intersection shall be deemed to be the #street line#.

(d) Dormers provided in accordance with the provisions of Section 23-413 (Permitted obstructions in certain districts) may penetrate a required setback area.

23-424 - Height and setback requirements for qualifying residential sites

LAST AMENDED
12/5/2024

R1 R2 R3 R4 R5

In the districts indicated, for #qualifying residential sites#, the height and setback modifications set forth in this Section shall apply.

The maximum base height and maximum #building# height shall be as set forth in the following table. At a height not higher than the maximum base height, a setback shall be provided in accordance with Section 23-423.

MAXIMUM BASE HEIGHT AND MAXIMUM #BUILDING# HEIGHTS FOR #QUALIFYING RESIDENTIAL SITES# AND #QUALIFYING SENIOR HOUSING#

District	Maximum Base Height (in feet)	Maximum Height of #Buildings o other Structures# (in feet
R1-1 R1-2 R1-2A R2 R2A R2X R3-1 R3-2 R3A R3X	35	3
R4 R4-1 R4A R4B	35	4
R5 R5A R5B R5D	45	5

23-425 - Height and setback modifications for large sites

LAST AMENDED
12/5/2024

R1 R2 R3 R4 R5

In the districts indicated, for #zoning lots# that meet the criteria of paragraph (a) of this Section, the height and setback modifications set forth in paragraph (b) shall apply.

(a) Eligible sites

The provisions of this Section shall apply to #large sites# that are #qualifying residential sites# or #zoning lots# located in R3-2, R4, R5, R5B or R5D Districts.

However, for #large sites# with existing #buildings#, eligible portions of the #zoning lot# for #developments# or #enlargements#:

(1) shall not include open space with amenities used for recreational purposes, such as play equipment, court game facilities, ball fields or fixed tables and chairs, unless such space is replaced in kind and size on the same #zoning lot#; and

(2) shall be located, partially or entirely, within 100 feet of a #street line#.

(b) Modified height and setback provisions

For eligible #zoning lots#, the maximum base height and maximum #building# heights set forth in Section 23-424 shall apply. However, where either the height at roof level of an existing #building#, or ornamental features in an existing non-#residential# #building or other structure#, meet or exceed the maximum heights set forth in such table, the maximum heights may be increased by 10 feet, or the height of such roof level or ornamental feature, whichever is lower.

23-426 - Additional height and setback provisions

LAST AMENDED
12/5/2024

R1 R2 R3 R4 R5

In the districts indicated, the following additional regulations shall apply:

(a) For any #zoning lot# located in a Historic District designated by the Landmarks Preservation Commission, any applicable maximum height regulations of Section 23-42, inclusive, or as modified in any applicable Special District, may be modified as follows: the maximum base

height may vary between the maximum set forth in Sections 23-422, 23-424, and 23-425, and the height of an adjacent #building# before setback, if such height is higher than the maximum base height.

(b) For #buildings# containing #multiple dwelling residences# with #street wall# widths exceeding 150 feet, as measured parallel to the #street line#, a minimum of 20 percent of the entire surface area of each #street wall# shall either recess or project a minimum of three feet from the #street wall#. The depth of required recesses or projections of a #building# shall be measured from the #street wall#.