Zoning Resolution

THE CITY OF NEW YORK
Zohran K. Mamdani, Mayor

CITY PLANNING COMMISSION
Sideya Sherman, Chair

23-40 - HEIGHT AND SETBACK REGULATIONS

File generated by https://zr.planning.nyc.gov on 11/24/2026

23-40 - HEIGHT AND SETBACK REGULATIONS

LAST AMENDED
12/5/2024

Height and setback regulations are set forth in Section 23-42, inclusive, for R1 through R5 Districts and Section 23-43, inclusive, for R6 through R12 Districts. Special rules governing certain areas are set forth in Section 23-44. Permitted obstructions to maximum heights are set forth in Section 23-41.

For #zoning lots# with #buildings# containing multiple #uses# or multiple #buildings# with different #uses#, inclusive of #residences#, subject to different height and setback regulations for the applicable district, the applicable height and setback regulations shall be whichever regulations permit the tallest overall heights.

23-41 - Permitted Obstructions

LAST AMENDED
12/5/2024

In all #Residence Districts#, the obstructions set forth in this Section, inclusive, shall be permitted to penetrate a maximum height limit set forth in Sections 23-42 (Height and Setback Requirements in R1 Through R5 Districts), 23-43 (Height and Setback Requirements for R6 Through R12 Districts) or 23-44 (Special Provisions for Certain Areas).

23-411 - General permitted obstructions

LAST AMENDED
12/5/2024

In all #Residence Districts#, the following obstructions shall be permitted to penetrate a maximum height limit or #sky exposure plane#. These allowances are generally common to #Residence#, #Commercial# and #Manufacturing Districts#.

(a) Awnings and other sun control devices, provided that when located at a level higher than the first #story#, excluding a #basement#, all such awnings and other sun control devices:

(1) shall be limited to a maximum projection from a #building# wall of 2 feet, 6 inches, except when located on the first #story# above a setback;

(2) shall have solid surfaces that, in aggregate, cover an area no more than 30 percent of the area of the #building# wall (as viewed in elevation) from which they project; and

(3) may rise above the permitted #building# height, up to the height of a parapet wall or railing permitted in accordance with this Section. When located on the first #story# above a setback, awnings and other sun control devices shall be limited to a projection of 50 percent of the depth of the required setback, and shall be limited, in total, to 50 percent of the width of the #building# wall from which they project;

(b) #Building# columns, having an aggregate width equal to not more than 20 percent of the #aggregate width of street walls# of a #building#, to a depth not exceeding 12 inches, in an #initial setback distance#, optional front open area, or any other required setback distance or open area set forth in the applicable height and setback regulations;

(c) Chimneys or flues, with a total width not exceeding 10 percent of the #aggregate width of street walls# of a #building# at any level;

(d) Decks, and other surfaces for recreational activities, not more than 3 feet, 6 inches in height, as measured from the maximum height limit;

(e) Flagpoles or aerials;

(f) Parapets, railings, or safety guards, whether applied singly, or in combination, provided that:

(1) parapets shall not exceed four feet in height;

(2) railings shall not exceed 4 feet, 6 inches in height, and shall be at least 50 percent open for the portion that exceeds four feet in height; and

(3) safety guards shall not exceed 10 feet in height and shall be at least 90 percent transparent for the portion that exceeds four feet in height;

(g) #Qualifying exterior wall thickness#;

(h) Roof thickness, up to 12 inches, to accommodate the addition of insulation, for #buildings# or portions of #buildings# constructed prior to December 5, 2024. For a #building# that has added roof thickness pursuant to this paragraph, the height of any other permitted obstruction may be measured from the finished level of the roof instead of the maximum height limit or #sky exposure plane#;

(i) Skylights, clerestories or other daylighting devices, not more than four feet in height, as measured from the maximum height limit. Such devices shall be limited to a #lot coverage# not greater than 10 percent of the #lot coverage# of the roof and be located at least eight feet from the #street wall# edge. However, such devices shall not be permitted obstructions above a roof with a slope greater than 20 degrees;

(j) Solar energy systems, #accessory# or as part of an #energy infrastructure equipment#:

(1) on the roof, or any portion thereof, of a #building#, with a slope less than 20 degrees: up to a height of 15 feet, or, when located on a bulkhead or other obstruction of this Section, a height of six feet; or

(2) on the roof, or any portion thereof, of a #building#, which has a slope of more than 20 degrees: up to a height of 60 inches in height, as measured perpendicular to the roof surface;

(k) Vegetated roofs, not more than 3 feet, 6 inches in height, excluding vegetation, as measured from the maximum height limit. On roofs with slopes greater than 20 degrees, vegetated roofs shall be limited to a height of 12 inches measured perpendicular to such roof surface;

(l) Weirs, check dams and other equipment for stormwater management, not more than 3 feet, 6 inches in height, as measured from the maximum height limit;

(m) Window washing equipment mounted on a roof;

(n) Wire, chain link or other transparent fences.

23-412 - Additional permitted obstructions

LAST AMENDED
12/5/2024

In all #Residence Districts#, the obstructions set forth in Section 23-411 (General permitted obstructions), as well as the following obstructions, shall be permitted to penetrate a maximum height limit or #sky exposure plane#:

(a) Balconies, unenclosed, subject to the provisions of Section 23-62 (Balconies);

(b) Dormers having an #aggregate width of street walls# equal to not more than 50 percent of the width of the #street wall# of a #detached# or #semi-detached# #single-# or #two-family residence#;

(c) Elevator or stair bulkheads (including shafts and vestibules), roof water tanks, #energy infrastructure equipment#, and #accessory# mechanical equipment (including enclosures or other screening), other than solar or wind energy systems (whether #accessory# or as part of #energy infrastructure equipment#), provided that:

(1) such obstructions shall be located not less than 10 feet from the #street wall# of a #building#, except that such obstructions need not be set back more than 25 feet from a #narrow# #street line# or more than 20 feet from a #wide# #street line#. However, such restrictions on location shall not apply to elevator or stair bulkheads (including shafts or vestibules), provided the #aggregate width of street walls# of such bulkheads within 10 feet of a #street wall#, facing each #street# frontage, does not exceed 30 percent of the #street wall# width of the #building# facing such frontage;

(2) the aggregate area of such obstructions, including any screening, does not exceed 50 percent of the #lot coverage# of the #building# and the height of such obstructions shall not exceed 15 feet above the maximum permitted height, except where otherwise permitted by paragraph (c)(3) of this Section;

(3) the aggregate area of such obstructions, including any screening, does not exceed 30 percent of the #lot coverage# of the #building#, and the height of such obstructions shall not exceed:

(i) R1 through R5 Districts, for #buildings# on #qualifying residential sites#, or in R3-2, R4, and R5 Districts, except R4-1, R4A, R4B and R5A Districts, for any #building#, a height of 25 feet above the maximum permitted height;

(ii) in R6 through R12 Districts:

(a) where the maximum permitted height of a #building# is 120 feet or lower, a height of 35 feet above the maximum permitted height; and

(b) where the maximum permitted height of a #building# is greater than 120 feet, a height of 55 feet above the maximum permitted height; and

(4) all equipment shall be subject to the applicable provisions of Section 26-50 (SPECIAL SCREENING AND ENCLOSURE PROVISIONS);

(d) Wind energy systems, #accessory# or as part of an #energy infrastructure equipment#, on portions of #buildings# with a height of 100 feet or greater, provided:

(1) the highest point of the wind turbine assembly does not exceed 55 feet;

(2) no portion of the wind turbine assembly is closer than 10 feet to any #lot line#; and

(3) the diameter of the swept area of the rotor does not exceed 15 feet.

23-413 - Permitted obstructions in certain districts

LAST AMENDED
12/5/2024

R1 R2 R3 R4 R5 R6 R7 R8 R9 R10 R11 R12

(a) In the districts indicated, for those #buildings# that are subject to Section 23-421 (Basic pitched-roof envelopes for certain districts), permitted obstructions are limited to chimneys, dormers, #qualifying exterior wall thickness#, flagpoles or aerials, parapet walls, roof thickness, skylights, solar energy systems and vegetated roofs pursuant to Section 23-411 (General permitted obstructions).

(b) In the districts indicated, for #buildings# other than those subject to the provisions set forth in Section 23-421, for those #buildings# subject to any height and setback regulations, the following rules shall apply within a required front setback distance above a maximum base height:

(1) Dormers shall be allowed as a permitted obstruction, provided that on any #street# frontage, either one of the following methods is applied:

(i) the aggregate width of all dormers at the maximum base height does not exceed 60 percent of the width of the #street wall# of the highest #story#entirely below the maximum base height. For each foot above the maximum base height, the aggregate width of all dormers shall be decreased by one percent of the #street wall# width of the highest #story# entirely below the maximum base height; or

(ii) the aggregate width of all dormers at the maximum base height does not exceed 40 percent of the width of the #street wall# of the highest #story# entirely below the maximum base height. Such dormers need not decrease in width as the height above the maximum base height increases.

Where towers allowances are utilized pursuant to the provisions of Section 23-

435, dormers may only rise to a height equivalent to 75 percent of the height of the tower portion. Such dormer shall be included in the calculation of tower coverage.

(2) Solar energy systems on a roof shall be limited to four feet or less in height, as measured from the maximum height limit, or the finished level of the roof, whichever is higher. However, on a roof with a slope greater than 20 degrees, such systems shall be limited to 18 inches in height as measured perpendicular to the roof surface.

(3) Wind energy systems shall not be allowed as permitted obstructions.

(4) Window washing equipment shall not be allowed as permitted obstructions.

23-42 - Height and Setback Requirements in R1 Through R5 Districts

LAST AMENDED
12/5/2024

R1 R2 R3 R4 R5

In the districts indicated, the height and setback regulations of a #building or other structure# shall be as set forth in Section 23-421 (Basic pitched-roof envelopes for certain districts) and 23-422 (Basic flat-roof envelopes for certain districts). Where applicable, standard setback provisions are set forth in Section 23-423.

Such heights may be increased on #qualifying residential sites# or on #zoning lots# containing #qualifying senior housing#, or for certain #large sites#, pursuant to Sections 23-424 or 23-425, respectively.

Additional provisions are set forth in Section 23-426 and Section 23-44, inclusive.

The height of all #buildings or other structures# shall be measured from the #base plane#. For the purposes of this Section, where #base planes# of different elevations apply to different portions of a #building or other structure#, each such portion of the #building# may be considered to be a separate #building#. Furthermore, for the purposes of this Section, #building segments# may be considered to be separate #buildings# and #abutting# #semi-detached# #buildings# may be considered to be one #building#.

23-421 - Basic pitched-roof envelopes for certain districts

LAST AMENDED
12/5/2024

R1 R2 R3A R3X R3-1 R3-2 R4 R4-1 R4A R5A

In the districts indicated, the height and setback regulations for #single-# or #two-family# #detached#, #semi-detached#, or #zero lot line# #buildings or other structures#, where permitted, shall be set forth in this Section.

The perimeter walls of a #building or other structure# are those portions of the outermost walls enclosing the #floor area# within a #building or other structure# at any level and height is measured from the #base plane#. Perimeter walls are subject to setback regulations at a maximum height above the #base plane# of 25 feet.

Above these heights, sloping planes control the maximum height of the #building or other structure# requiring either a setback or a pitched roof. These planes start at the maximum permitted height of the perimeter walls and meet at a ridge line of 35 feet above the #base plane#. The exact locations of

these planes are flexible and are determined in the following steps set forth in paragraphs (a) through (g):

(a) At a height of 35 feet above and parallel to the #base plane#, a plane is projected above the area enclosed by and including the perimeter walls of the #building or other structure#. A second plane (the perimeter wall plane) is projected in the same manner at a height of 25 feet above the #base plane#. (See Figure A)

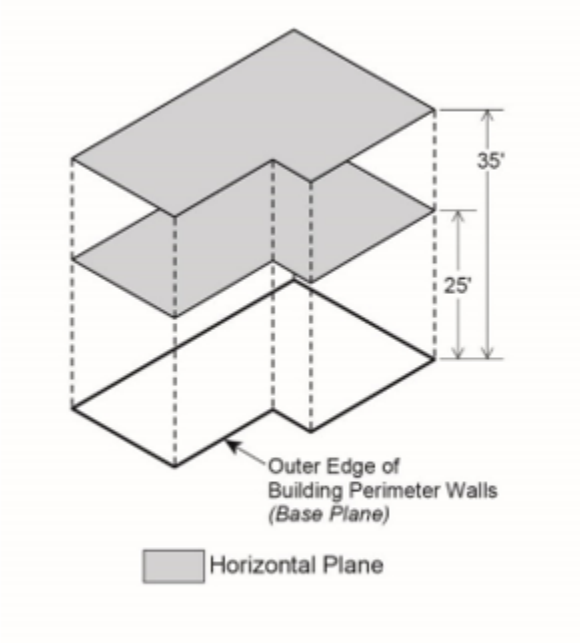

Figure A

(b) Each perimeter wall of the #building or other structure# with a horizontal dimension of eight feet or more which projects from an adjacent perimeter wall at least 18 inches may have an apex point directly above it on the 35-foot-high plane. (See Figure B). The location of the apex point is flexible provided it is directly above its perimeter wall and provided a line drawn from the intersection of two perimeter walls to such an apex point does not exceed 80 degrees to the horizontal. An apex point is not required for each qualifying perimeter wall; however, the maximum number of apex points above each such wall is one.

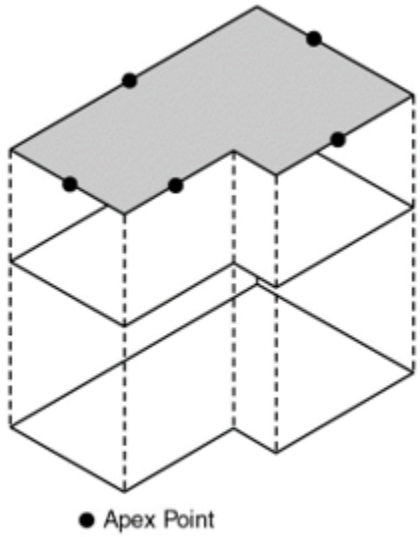

Figure B

(c) One “ridge line” is extended in a straight line from each apex point along the 35-foot-high plane. Ridge lines which connect two apex points may cross other ridge lines. Otherwise, ridge lines which extend from only one apex point must terminate at a point of intersection with another ridge line. (See Figure C)

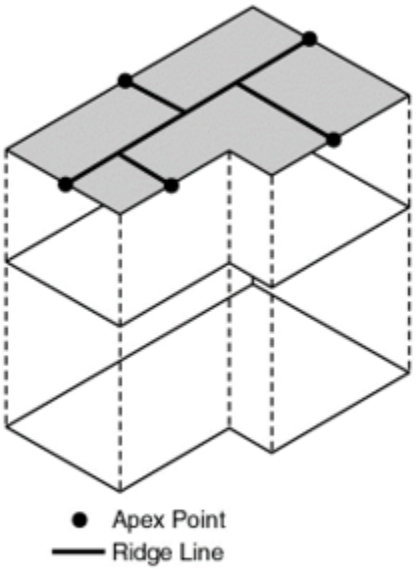

Figure C

(d) Sloping planes are extended in a straight line outward and downward from each ridge line until they intersect the perimeter wall plane. Every sloping plane generated must intersect the perimeter wall plane for the full width of the ridge line from which it extends. (See Figure D). The maximum angle of pitch for any sloping plane may not exceed 80 degrees to the horizontal. Sloping planes extended from ridge lines perpendicular or within 45 degrees of being perpendicular to each other may intersect, in which case the higher plane defines the limit of the envelope. Sloping planes extended from ridge lines parallel or within 45 degrees of being parallel to each other must intersect the perimeter wall plane without intersecting each other.

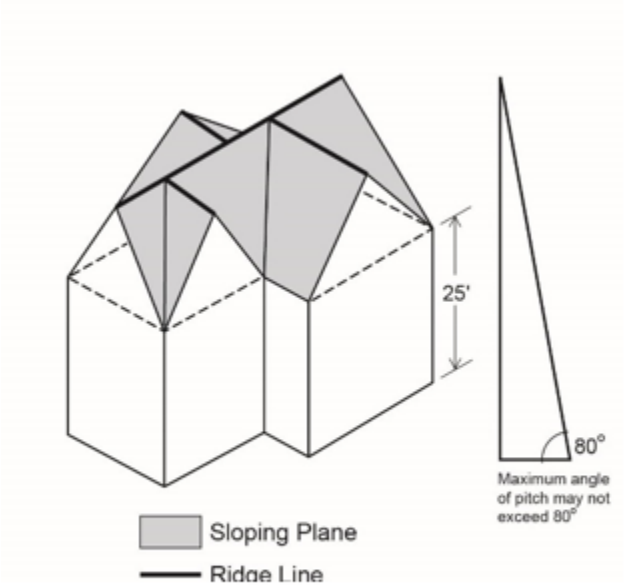

Figure D

(e) The perimeter walls are then extended vertically beyond the perimeter wall plane, up to the heights defined by the sloping planes generated in paragraph (d). (See Figure E). The perimeter walls of the #building or other structure#, the sloping planes and the perimeter wall extensions define the #building# envelope. (See Figure F).

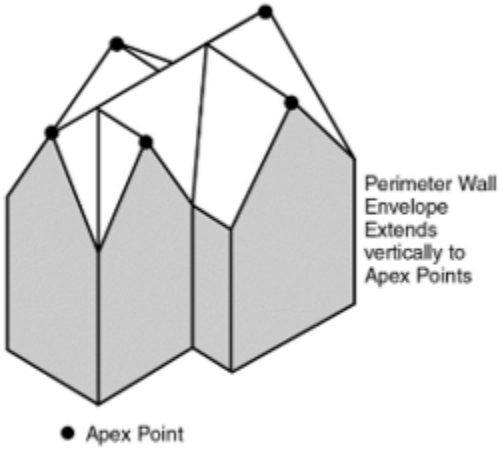

Figure E

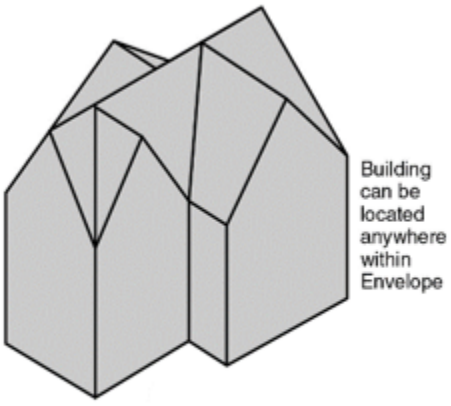

Figure F

(f) Special Situations

For convex curved perimeter walls, the #building or other structure# must be within a plane curve tapering uniformly to a vertex located at a height of 35 feet. For concave curved perimeter walls, the #building or other structure# must lie within a plane curve extending from the maximum perimeter wall height to a ridge line parallel to the prolongation of the perimeter wall at the 35-foot level. Such plane curves may not exceed a pitch of 80 degrees in relation to a plane drawn parallel to the #base plane# at the maximum height of the permitted perimeter wall. (See Figure G).

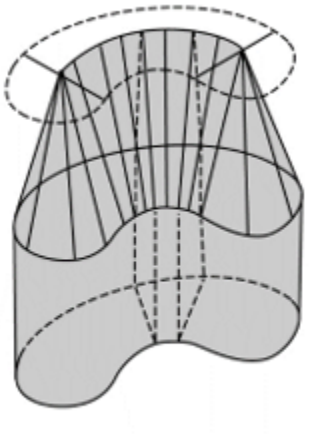

Figure G

(g) In R1 and R2 Districts without a letter suffix, for #zoning lots# that either:

(1) have a #lot area# of at least 9,500 square feet and #lot width# of at least 100 feet; or

(2) have a slope, as measured from the #street wall line level# to the #rear wall line level#, of at least five percent to the horizontal;

the reference plane for applying the regulations of this Section may be located up to five feet above the #base plane#.

23-422 - Basic flat-roof envelopes for certain districts

LAST AMENDED
12/5/2024

R3-2 R4 R4B R5 R5B R5D

In the districts indicated, the height and setback regulations for #buildings or other structures# shall be set forth in this Section.

R3-2 R4

(a) In the districts indicated, for #residences# not subject to the provisions of Section 23-421, the maximum #building# height shall be 35 feet.

R4B

(b) In the district indicated, the maximum #building# height shall be 25 feet.

R5B

(c) In the district indicated, the maximum #building# height shall be 35 feet.

R5

(d) In the district indicated, except R5 Districts with a letter suffix, the maximum base height shall be 35 feet, and the maximum #building# height shall be 45 feet. At a height not higher than the maximum base height, a setback shall be provided in accordance with Section 23-423.

R5D

(e) In the district indicated, the maximum #building# height shall be 45 feet.

23-423 - Standard setback regulations

LAST AMENDED
12/5/2024

Where minimum setback regulations are specific for a particular #building# envelope for a particular district, the following shall apply.

At a height not higher than the maximum base height specified for the applicable district, a setback with a depth of at least 10 feet shall be provided from any #street wall# fronting on a #wide street#, and a setback with a depth of at least 15 feet shall be provided from any #street wall# fronting on a #narrow street#. Such minimum setbacks may be modified as follows:

(a) The depth of such required setback may be reduced by one foot for every foot that the #street wall# is located beyond the minimum required #front yard#, but in no event shall a setback of less than seven feet in depth be provided, except as otherwise set forth in this Section. To allow #street wall# articulation, where a #street wall# is divided into different segments and located at varying depths from the #street line#, such permitted setback reduction may be applied to each #street wall# portion separately.

(b) The depth of such setbacks may include the depth of recesses or #outer courts# in the #street wall# of the #building# base, provided that the aggregate width of any such recessed portion of a #street wall# with a setback less than seven feet, as applicable, does not exceed 30 percent of the #aggregate width of street wall# at any level.

(c) These setback provisions are optional for any #building# wall that either is located beyond 50 feet of a #street line#, or oriented so that lines drawn perpendicular to it, in plan, would intersect a #street line# at an angle of 65 degrees or less. In the case of an irregular #street line#, the line connecting the most extreme points of intersection shall be deemed to be the #street line#.

(d) Dormers provided in accordance with the provisions of Section 23-413 (Permitted obstructions in certain districts) may penetrate a required setback area.

23-424 - Height and setback requirements for qualifying residential sites

LAST AMENDED
12/5/2024

R1 R2 R3 R4 R5

In the districts indicated, for #qualifying residential sites#, the height and setback modifications set forth in this Section shall apply.

The maximum base height and maximum #building# height shall be as set forth in the following table. At a height not higher than the maximum base height, a setback shall be provided in accordance with Section 23-423.

MAXIMUM BASE HEIGHT AND MAXIMUM #BUILDING# HEIGHTS FOR #QUALIFYING RESIDENTIAL SITES# AND #QUALIFYING SENIOR HOUSING#

District	Maximum Base Height (in feet)	Maximum Height of #Buildings o other Structures# (in feet
R1-1 R1-2 R1-2A R2 R2A R2X R3-1 R3-2 R3A R3X	35	3
R4 R4-1 R4A R4B	35	4
R5 R5A R5B R5D	45	5

23-425 - Height and setback modifications for large sites

LAST AMENDED
12/5/2024

R1 R2 R3 R4 R5

In the districts indicated, for #zoning lots# that meet the criteria of paragraph (a) of this Section, the height and setback modifications set forth in paragraph (b) shall apply.

(a) Eligible sites

The provisions of this Section shall apply to #large sites# that are #qualifying residential sites# or #zoning lots# located in R3-2, R4, R5, R5B or R5D Districts.

However, for #large sites# with existing #buildings#, eligible portions of the #zoning lot# for #developments# or #enlargements#:

(1) shall not include open space with amenities used for recreational purposes, such as play equipment, court game facilities, ball fields or fixed tables and chairs, unless such space is replaced in kind and size on the same #zoning lot#; and

(2) shall be located, partially or entirely, within 100 feet of a #street line#.

(b) Modified height and setback provisions

For eligible #zoning lots#, the maximum base height and maximum #building# heights set forth in Section 23-424 shall apply. However, where either the height at roof level of an existing #building#, or ornamental features in an existing non-#residential# #building or other structure#, meet or exceed the maximum heights set forth in such table, the maximum heights may be increased by 10 feet, or the height of such roof level or ornamental feature, whichever is lower.

23-426 - Additional height and setback provisions

LAST AMENDED
12/5/2024

R1 R2 R3 R4 R5

In the districts indicated, the following additional regulations shall apply:

(a) For any #zoning lot# located in a Historic District designated by the Landmarks Preservation Commission, any applicable maximum height regulations of Section 23-42, inclusive, or as modified in any applicable Special District, may be modified as follows: the maximum base

height may vary between the maximum set forth in Sections 23-422, 23-424, and 23-425, and the height of an adjacent #building# before setback, if such height is higher than the maximum base height.

(b) For #buildings# containing #multiple dwelling residences# with #street wall# widths exceeding 150 feet, as measured parallel to the #street line#, a minimum of 20 percent of the entire surface area of each #street wall# shall either recess or project a minimum of three feet from the #street wall#. The depth of required recesses or projections of a #building# shall be measured from the #street wall#.

23-43 - Height and Setback Requirements in R6 Through R12 Districts

LAST AMENDED
12/5/2024

R6 R7 R8 R9 R10 R11 R12

In the districts indicated, the #street wall# location of a #building# shall be as set forth in Section 23-431, the height and setback regulations of a #building or other structure# shall be as set forth in Section 23-432, and standard setback provisions shall be as set forth in Section 23-433.

The maximum heights set forth in Section 23-432 may be modified for #zoning lots# meeting certain criteria, in accordance with Section 23-434, or where towers are permitted in accordance with Section 23-435. Additional height and setback provisions are set forth in Section 23-436 and Section 23-44, inclusive.

The height of all #buildings or other structures# shall be measured from the #base plane#. For the purposes of this Section, where #base planes# of different elevations apply to different portions of a #building or other structure#, each such portion of the #building# may be considered to be a separate

#building#.

#Lot coverages# for towers, including maximums and minimums, where applicable, shall be applied at every level.

23-431 - Street wall location requirements

LAST AMENDED
12/5/2024

R6 R7 R8 R9 R10 R11 R12

In the districts indicated, the applicable #street wall# location provisions of this Section shall apply. Such provisions shall apply to the portion of a #street wall# located below the maximum base height and before the required setback as set forth in Section 23-432 (Height and setback requirements).

(a) Line-up rules

In R6B, R7B, and R8B Districts, the #street wall# of a #building# shall be located no closer to the #street line# than the closest #street wall#, or portion thereof, nor further from the #street line# than the furthest #street wall#, or portion thereof, of an existing adjacent #building# on the same or an adjoining #zoning lot# located on the same #street# frontage. Eligible adjacent #buildings# shall be located within 15 feet of the #street line#, within 25 feet of the subject #building#, and have a height that exceeds 35 feet. Where an existing adjacent #building# has multiple #street walls# located at varying depths from the #street line#, the subject #street wall# shall not be located closer to the #street line# than the furthest portion of such existing adjacent #street wall# that is at least five feet in width and extends to at least half the height of the #building#.

However, where, the #street wall# surrounding the subject #building# do not have a #prevailing street wall frontage#, the applicable #street wall# regulations of paragraph (b) may be applied.

(b) Percentage-based rules

For all #buildings# that are not subject to the provisions of paragraph (a), the following shall apply:

(1) Along #wide streets#, at least 70 percent of the #aggregate width of street walls# shall be located within eight feet of the #street line# and extend to at least the minimum base height specified in Section 23-432, or the height of the #building#, whichever is less. Up to 30 percent of the #aggregate width of street walls# may be recessed beyond eight feet of the #street line#, provided that any such recesses deeper than 10 feet along a #wide street# or 15 feet along a #narrow street# are located within an #outer court#.

(2) Along #narrow streets#, at least 70 percent of the #aggregate width of street wall# shall be located within 10 feet of the #street line# and extend to at least the minimum base height specified in Section 23-432, or the height of the #building#, whichever is less. Up to 30 percent of the #aggregate width of street walls# may be recessed beyond 10 feet of the #street line#, provided that any such recesses deeper than 15 feet are located within an #outer court#.

However, where the #street walls# surrounding the subject #building# are located on a #block# with a #prevailing street wall frontage# that is located further from the #street line# than the applicable provisions of this paragraph, the line-up provisions of paragraph (a) of this Section may be applied.

(c) Modifications for large zoning lots

Notwithstanding the provisions of paragraph (a) or (b) of this Section, for #zoning lots# with a #lot area# of at least 40,000 square feet or for #zoning lots# that occupy an entire #block#, at least 50 percent of the #aggregate width of street walls# shall be located within 15 feet of the #street line# and extend to at least the minimum base height specified in Section 23-432, or the height of the #building#, whichever is less.

(d) Articulation allowances

In all districts, and along all frontages, #street wall# articulation, including, but not limited to, window recesses and structural expression on the #building# facade, shall be permitted to project or recess beyond the #street wall# locations established in paragraphs (a), (b) or (c) of this Section, provided such articulation does not exceed a depth or projection of 12 inches. In addition, to accommodate other forms of #street wall# articulation, such as bay windows, and facade recesses, up to 50 percent of the #aggregate width of street wall#, at any level, may recess or project beyond such #street wall# location provisions of this Section, provided that no such recess or projection exceeds a depth of three feet, as measured perpendicular to the #street wall#, or portion thereof. No projection shall extend beyond the #street line#, except where encroachments into the public right-of-way are permitted by the New York City Administrative Code.

23-432 - Height and setback requirements

LAST AMENDED
12/5/2024

R6 R7 R8 R9 R10 R11 R12

In the districts indicated, the minimum base height, maximum base height, and maximum #building# height shall be as set forth in the following table. Separate maximum base heights and maximum #building# heights are set forth for #zoning lots# containing standard #residences# and #zoning lots# containing #qualifying affordable housing# or #qualifying senior housing#.

For portions of a #building# #street wall# that exceed the maximum base height, a setback shall be provided at a height not lower than the minimum base height or higher than the maximum base height in accordance with Section 23-433.

MINIMUM BASE HEIGHT, MAXIMUM BASE HEIGHT,
AND MAXIMUM BUILDING HEIGHTS

District	**Minimum base height (in feet)**	**Standard #residences#**		**#Qualifying affordable ho #qualifying senior hou**	
		Maximum base height (in feet)	**Maximum height of #buildings or other structures# (in feet)**	**Maximum base height (in feet)**	**Maxim height #buildi other structu feet)**
R6A R6[1] R6-1	40	65	75	65	
R6[2]	30	45	55	65	
R6B	30	45	55	45	
R6D R6-2	30	45	65	55	

R7A R7-11 R7-21	40	75	85	85	
R7-12 R7-22	40	65	75	85	
R7B	40	65	75	65	
R7D	60	85	105	95	
R7X R7-3	60	95	125	105	
R8A	60	95	125	105	
R8B	55	65	75	85	
R8X	60	95	155	105	
R8[2]	60	85	115	105	
R8[1]	60	95	135	105	
R8[3]	60	95	135	125	
R9A[1] R9[1]	60	105	145	135	
R9A[2] R9[2]	60	95	135	135	
R9D R9-1	60	125	175	155	
R9X[1]	105	125	175	155	
R9X[2]	60	125	165	155	

R10X[1] R10[1]	60	155	215	155	
R10A[1]	125	155	215	155	
R10A[2] R10X[2] R10[2]	60	125	185	155	
R11A[1]	125	155	255	155	
R11A[2] R11	60	155	255	155	
R12	60	155	325	155	

1 For #zoning lots# or portions thereof within 100 feet of a #wide street#

2 For #zoning lots# or portions thereof on a #narrow street# beyond 100 feet of a #wide street# or, for #zoning lots# with only #wide street# frontage, portions of such #zoning lot# beyond 100 feet of the #street line#

3 Outside of #Mandatory Inclusionary Housing areas#, for #zoning lots#, or portions thereof, located within 100 feet of a #wide street#, containing #UAP developments# or #qualifying senior housing#

23-433 - Standard setback regulations

LAST AMENDED
12/5/2024

R6 R7 R8 R9 R10 R11 R12

At a height not lower than the minimum base height or higher than the maximum base height specified for the applicable district, a setback with a depth of at least 10 feet shall be provided from any #street wall# fronting on a #wide street#, and a setback with a depth of at least 15 feet shall be provided from any #street wall# fronting on a #narrow street#. Such minimum setbacks may be modified as follows:

(a) The depth of such required setback may be reduced by one foot for every foot that the #street wall# is located beyond the #street line#, but in no event shall a setback of less than seven feet in depth be provided, except as otherwise set forth in this Section. To allow #street wall# articulation, where a #street wall# is divided into different segments and located at varying depths from the #street line#, such permitted setback reduction may be applied to each #street wall# portion separately.

(b) The depth of such setbacks may include the depth of recesses or #outer courts# in the #street wall# of the #building# base, provided that the aggregate width of any such recessed portion of a #street wall# with a setback less than seven feet, as applicable, does not exceed 30 percent of the #aggregate width of street wall# at any level.

(c) These setback provisions are optional for any #building# wall that either is located beyond 50 feet of a #street line#, or oriented so that lines drawn perpendicular to it, in plan, would intersect a #street line# at an angle of 65 degrees or less. In the case of an irregular #street line#, the line connecting the most extreme points of intersection shall be deemed to be the #street line#.

(d) Dormers provided in accordance with the provisions of Section 23-413 (Permitted obstructions in certain districts) may penetrate a required setback area.

23-434 - Height and setback modifications for eligible sites

LAST AMENDED
12/5/2024

R6 R7 R8 R9 R10 R11 R12

In the districts indicated, without a letter suffix, for #zoning lots# that meet the criteria of paragraph (a) of this Section, the height and setback modifications set forth in paragraph (b) may be applied.

The eligible site provisions of this Section may be applied to either a single #zoning lot# that meets the criteria of paragraph (a) or two or more #zoning lots# under single fee ownership or alternate ownership arrangements that are contiguous or would be contiguous but for their separation by a #street#, where the combined #lot area# exceeds 40,000 square feet, and where at least one individual #zoning lot# meets the criteria of paragraph (a).

(a) Eligible sites

The provisions of this Section shall apply to #zoning lots# that meet at least one of the following criteria:

(1) #zoning lots# with a #transportation-infrastructure-adjacent frontage#;

(2) #zoning lots# where one of the following irregularities exists on December 5, 2024, and the date of application for a building permit:

(i) an #interior lot#, or portions thereof, has a depth that is less than 85 feet, or a #through lot#, or portion thereof, has a depth that is less than 170 feet;

(ii) an #interior lot#, or portions thereof, has a depth that is greater than or equal to 115 feet, or a #through lot#, or portion thereof, has a depth that is greater than or equal to 230 feet;

(iii) #corner lots# or other #zoning lots# with multiple #front lot lines# where the angle between two #front lot lines# is more than 15 degrees from being

perpendicular;

(iv) #through lots# or other #zoning lots# with multiple #front lot lines# where the angle between two #front lot lines# is more than 15 degrees from being parallel;

(v) #zoning lots# where, over the depth of the lot, as measured perpendicular from the #front lot line#, there is a slope of at least 15 percent to the horizontal; or

(3) #zoning lots# that have a #lot area# of at least 20,000 square feet or occupy an entire #block#.

In addition, for #zoning lots# with a #lot area# of 30,000 square feet or more with existing #buildings#, the following restrictions shall apply. The area of the #zoning lot# used for #developments# or #enlargements# under the provisions of this Section:

(i) shall not include any portion of open space with amenities used for recreational purposes, such as play equipment, court game facilities, ball fields or fixed tables and chairs, unless such space is replaced in kind and size on the same #zoning lot#; and

(ii) shall be located, partially or entirely, within 100 feet of a #street line#.

(b) Modified height and setback provisions

For eligible #zoning lots#, the maximum permitted #building# height may be modified by the heights in the table below. However, for #zoning lots# with a #lot area# of at least 40,000 square feet, whether singly or in combination, where either the height at roof level of an existing #building#, or ornamental features in an existing non-residential #building or other

structure#, meet or exceed the maximum heights set forth in such table, the maximum heights may be increased by 25 percent, or the height of such roof level or ornamental feature, whichever is lower.

MAXIMUM BUILDING HEIGHT FOR ELIGIBLE SITES

District	**Maximum height of #buildings or other structures# (in feet)**
R6-2	95
R6 R6-1	125
R7-1 R7-2	155
R7-3	185
R8	215
R8[1]	255
R9	285
R9-1	315
R10	355
R11	405
R12	495

1 for #UAP developments# or #qualifying senior housing# on #zoning lots#, or portions thereof, within 100 feet of a #wide street#

23-435 - Tower regulations

LAST AMENDED
12/5/2024

In R9 through R12 Districts, other than R9A, R9X, R10A or R11A Districts, as an alternative to the maximum #building# heights set forth in Section 23-432, towers are permitted pursuant to the provisions of this Section.

Above the maximum base height specified for the particular district, a tower with a maximum #lot coverage# of:

(a) 65 percent shall be permitted up to a height of 300 feet; and

(b) 50 percent shall be permitted above a height of 300 feet.

23-436 - Additional height and setback provisions

LAST AMENDED
12/5/2024

R6 R7 R8 R9 R10 R11 R12

In the districts indicated, the following additional regulations shall apply:

(a) Existing buildings may be vertically #enlarged# by up to one story or 15 feet without regard to the #street wall# location requirements of Section 23-431.

(b) On #through lots# which extend less than 190 feet in maximum depth from #street# to #street#, the #street wall# location requirements of Section 23-431 shall be mandatory along only one #street# frontage.

(c) On #corner lots#, or portions thereof, the #street wall# location requirements of Section 23-431 shall be mandatory along only one #street# frontage. Where one of the #street# frontages bounding the #corner lot# is a #wide street# and the other a #narrow street#, the #street wall# location rules shall be applied along the #wide street# frontage;

(d) The #street wall# location and minimum base height provisions of Sections 23-431 and 23-432, respectively, shall not apply along any street frontage of a #zoning lot# occupied by buildings whose #street wall# heights or widths will remain unaltered.

(e) The minimum base height provisions of Section 23-432 shall not apply to #buildings#, or portions thereof, that are #developed# or #enlarged# and do not exceed such minimum base heights.

(f) For any zoning lot located in a Historic District designated by the Landmarks Preservation Commission, the #street wall# location and minimum or maximum base height regulations of Section 23-43, inclusive, or as modified in any applicable Special District, may be modified as follows:

(1) The minimum base height of a #street wall# may vary between the applicable minimum set forth in Section 23-432, and the height of the #street wall# of an adjacent #building# before setback, if such height is lower than the minimum base height; and

(2) The maximum base height of a #street wall# may vary between the applicable maximum set forth in Section 23-432, inclusive, and the height of the #street wall# of adjacent #building# before setback, if such height is higher than the maximum base height.

(g) Where a continuous sidewalk widening is provided on the #zoning lot#, along the entire #block# frontage of a #street#, the boundary of the sidewalk widening shall be considered to be the #street line# for the purposes of applying the provisions of Section 23-431, but such widening may be included in the setback reductions permitted pursuant to paragraph (a) of Section 23-433.

23-44 - Special Provisions for Certain Areas

LAST AMENDED
12/5/2024

23-441 - Special tower provisions

LAST AMENDED
12/5/2024

The tower provisions of Section 23-435 shall be modified in certain areas, as follows:

(a) In R9D and R10X Districts, the minimum #lot coverage# of a tower above the maximum base height shall be 33 percent of the #lot area# of the #zoning lot#. However, any #story# located within the highest 15 percent of the tower may cover less than 33 percent of the #lot area# of a #zoning lot# provided that the gross area of any such #story# does not exceed 90 percent of the gross area of that #story# located directly below the highest 15 percent of the tower.

(b) In R9 or R10 districts without a letter suffix, the following tower-on-a-base provisions shall apply to #buildings# where:

(1) more than 25 percent of the #floor area# is #residential#; and

(2) such #building# is located on a #zoning lot# that fronts upon a #wide street# and is either within 125 feet from such #wide street# frontage along the #short dimension of a block# or within 100 feet from such #wide street# frontage along the long dimension of the #block#.

The minimum #lot coverage# of a tower above the maximum base height shall be 30 percent of the #lot area# of the #zoning lot#. However, any #story# located within the highest 15 percent of the tower may cover less than 30 percent of the #lot area# of a #zoning lot# provided that the gross area of any such #story# does not exceed 90 percent of the gross area of that #story# located directly below the highest 15 percent of the tower.

At least 55 percent of the total #floor area# permitted on the #zoning lot# shall be located in #stories# located either partially or entirely below a height of 150 feet. When the #lot coverage# of the tower portion is less than 40 percent, the required 55 percent of the total #floor area# distribution, within a height of 150 feet, shall be increased in accordance with the following requirement:

Percent of #lot coverage# of the tower portion	**Minimum percent of total #building# #floor area# distribution below the level of 150 feet**
40.0 or greater	55.0
39.0 to 39.9	55.5

38.0 to 38.9	56.0
37.0 to 37.9	56.5
36.0 to 36.9	57.0
35.0 to 35.9	57.5
34.0 to 34.9	58.0
33.0 to 33.9	58.5
32.0 to 32.9	59.0
31.0 to 31.9	59.5
30.0 to 30.9	60.0

For the purposes of determining the permitted tower coverage and the required minimum distance between #buildings# or portions thereof, that portion of a #zoning lot# located within 125 feet from the #wide street# frontage along the short dimension of a #block# shall be treated as if it were a separate #zoning lot#.

No tower or portion thereof shall be located on a #narrow street# at a distance that is more than 100 feet from the intersection with a #wide street#.

(c) No towers shall be permitted on any #building# located wholly or partly in a #Residence District#, that is within 100 feet of a #public park# with an area of one acre or more, or a

#street line# opposite such a #public park#.

23-442 - Special provisions for certain community districts

LAST AMENDED
12/5/2024

(a) Borough of Manhattan

(1) Community District 9

In R8 Districts without a letter suffix in the portion of Community District 9 in the Borough of Manhattan located north of West 125th Street, the underlying height and setback regulations for the zoning district shall apply, except that the additional height allowances for eligible sites set forth in Section 23-434 shall not apply.

(2) Community District 6

In Community District 6 in the Borough of Manhattan, in R10 Districts located east of First Avenue and north of East 51st Street, for #buildings# where more than 25 percent of the #floor area# is #residential# but are not otherwise subject to the tower-on-a-base provisions of paragraph (b) of this Section, the following shall apply.

The minimum #lot coverage# of a tower above the maximum base height shall be 30 percent of the #lot area# of the #zoning lot#. However, any #story# located within the highest 15 percent of the tower may cover less than 30 percent of the #lot area# of a

#zoning lot# if the gross area of any such #story# does not exceed 90 percent of the gross area of that #story# directly below the highest 15 percent of the tower.

At least 45 percent of the total #floor area# permitted on the #zoning lot# shall be located in #stories# located either partially or entirely below a height of 150 feet. In addition, when the #lot coverage# of the tower is less than 40 percent, the required 45 percent of the total #floor area# distribution, within a height of 150 feet, shall be increased in accordance with the following requirement:

Percent of #lot coverage# of the tower portion	**Minimum percent of total #building# #floor area# distribution below the level of 150 feet**
40.0 or greater	45.0
39.0 to 39.9	45.5
38.0 to 38.9	46.0
37.0 to 37.9	46.5
36.0 to 36.9	47.0
35.0 to 35.9	47.5
34.0 to 34.9	48.0
33.0 to 33.9	48.5
32.0 to 32.9	49.0

31.0 to 31.9	49.5
30.0 to 30.9	50.0

(b) Borough of Brooklyn

(1) Street wall modifications in Community Districts 8 and 9

For the purposes of applying the #street wall# location as well as the height and setback provisions of Sections 23-431 and 23-432, respectively, where the Administrative Code establishes restrictions on the location of #buildings# on lots fronting upon and within 30 feet of Eastern Parkway in Community Districts 8 and 9 in the Borough of Brooklyn, lines drawn 30 feet north of and 30 feet south of, and parallel to, Eastern Parkway shall be considered the northern and southern #street lines# of Eastern Parkway.

(2) Height and setback modifications in Community District 9

For #zoning lots# in #Mandatory Inclusionary Housing areas# within the portion of Community District 9 in the Borough of Brooklyn, on the #block# bounded by Montgomery Street, Washington Avenue, Sullivan Place, and Franklin Avenue, the following height and setback modifications shall apply. The maximum height of a #building or other structure# shall not exceed an imaginary plane that:

(i) begins at an elevation of 90 feet above the level of the #base plane#, beginning at the point along the center line of Sullivan Place, distant 120 feet, 4 inches east of the center line of Washington Avenue and parallel to Sullivan Place, and

extending to Montgomery Street at an angle of 83 degrees, 17 minutes, 38 seconds; and

(ii) extends upwards at a slope equivalent of 10 percent to the horizontal, in an easterly direction, as measured perpendicular to the line established by paragraph (b)(2)(i) of this Section.

Obstructions permitted pursuant to Section 23-411 may penetrate such imaginary plane provided that they are at least 90 percent transparent. In addition, obstructions specified in Section 23-412(c) located within 85 feet of Franklin Avenue may penetrate such imaginary plane up to 12 feet if there is a minimum of 30 feet between such obstructions and the obstruction is no longer than 60 feet in length along the frontage of Franklin Avenue.

23-443 - Special provisions in other geographies

LAST AMENDED
12/5/2024

(a) Special provisions for #zoning lots# adjoining #public parks#

In all districts, where a #building# adjoining a #public park# utilizes the provisions of Section 23-381, such #public park# shall be considered a #wide street# for the purpose of applying the

regulations set forth in Sections 23-42 and 23-43 to any #building or other structure# on a #zoning lot# adjoining such #public park#.

(b) Special provisions for #zoning lots# with #transportation-infrastructure-adjacent frontage#

For #zoning lots# or portions thereof within 100 feet of a #street line# along a #transportation-infrastructure-adjacent frontage#, the following shall apply:

(1) the applicable #street wall# location provisions of Section 23-431 and the minimum base height provisions of Section 23-432 need not apply; and

(2) for #buildings# containing #multiple dwelling residences# that are not otherwise eligible for additional height pursuant to Section 23-434, the applicable maximum #building# heights may be increased by 10 feet in R1 through R6 Districts, and by 20 feet in R7 through R12 Districts.

(c) #Limited Height Districts#

In the #Limited Height Districts#, the underlying height and setback regulations for the zoning district shall apply, except that:

(1) the additional height allowances for eligible sites set forth in Section 23-434 shall not apply; and

(2) for #zoning lots# that do not contain #qualifying affordable housing# or #qualifying senior housing#, the maximum height of #buildings or other structures# shall be as shown in the following table:

#Limited height district#	Maximum height above #curb level# or #base plane#, as applicable
LH-1	50 feet
LH-lA	60 feet
LH-2	70 feet
LH-3	100 feet

(d) Special provisions along certain district boundaries

Where a #lot line# of a #zoning lot# located in an R6 through R12 District coincides with the district boundary of an R1 through R5 District, the height of a #building# within a 'transition area' measured parallel to the district boundary, shall not exceed the heights set forth in the table, depending on the zoning district adjacency, the adjacent #zoning lot# condition, and the width of the #zoning lot#.

TRANSITION AREA DIMENSION AND MAXIMUM HEIGHT

	Maximum permitted height within transition area (in feet, above #base plane#)	
Adjacent zoning district and #zoning lot# condition	**For #zoning lots# with a #lot width# less than or equal to 30 feet**	**For #zoning lots# with a #lot width# greater than 30 feet**

Within a distance equal to one-third of the #lot width# of the district boundary	Within 15 feet of the district boundary	Beyond 15 feet and within 25 feet of the district boundary		
R1 R2 R3	Non-#qualifying residential sites#	45*	45*	65
	#Qualifying residential sites#	65	65	85
R4 R5	Non-#qualifying residential sites#	65	65	85
	#Qualifying residential sites#	85	85	85

* For #zoning lots# in R7, R8, R9 and R10 Districts, the maximum permitted height within the transition area shall be 65 feet.