Zoning Resolution

THE CITY OF NEW YORK
Zohran K. Mamdani, Mayor

CITY PLANNING COMMISSION
Sideya Sherman, Chair

33-40 - HEIGHT AND SETBACK REGULATIONS

File generated by https://zr.planning.nyc.gov on 11/25/2026

33-40 - HEIGHT AND SETBACK REGULATIONS

LAST AMENDED
12/5/2024

All #buildings# in #Commercial Districts# shall comply with the height and setback regulations set forth in this Section, inclusive. However, the height and setback regulations of this Section, inclusive, shall not apply in #Commercial Districts# mapped within, or with a #residential equivalent# of an R6 through R12 District with a letter suffix. In lieu thereof, the height and setback regulations of Section 23-43 (Height and Setback Requirements in R6 Through R12 Districts), inclusive, shall be applied to all #buildings# in accordance with the applicable #Residence District# regulations, pursuant to Section 33-03 (Applicability of Article II, Chapter 3 Regulations).

33-41 - Definitions

LAST AMENDED
11/19/1987

Words in italics are defined in Section 12-10 or, if applicable exclusively to this Section, in this Section.

33-42 - Permitted Obstructions

In all #Commercial Districts#, the obstructions set forth in Section 23-411 (General permitted obstructions), as well as the following obstructions shall be permitted and may thus penetrate a maximum height limit or #sky exposure planes#, as set forth in Sections 33-43 (Maximum Height of Walls and Required Setbacks), 33-44 (Alternate Front Setbacks), 33-46 (Height and Setback Provisions for C7 Districts) or 33-491 (Limited Height Districts):

(a) Balconies, unenclosed, subject to the provisions of Section 24-164 (Balconies);

(b) Elevator or stair bulkheads (including shafts; and vestibules, roof water tanks, #energy infrastructure equipment#, and #accessory# mechanical equipment (including enclosures and screening), other than solar or wind energy systems (whether #accessory# or as part of #energy infrastructure equipment#), provided that:

(1) such obstructions shall be located not less than 10 feet from the #street wall# of a #building#, except that such obstructions need not be set back more than 25 feet from a #narrow# #street line# or more than 20 feet from a #wide# #street line#. However, such restrictions on location shall not apply to elevator or stair bulkheads (including shafts or vestibules), provided the #aggregate width of street walls# of such bulkheads within 10 feet of a #street wall#, facing each #street# frontage, does not exceed 30 percent of the #street wall# width of the #building# facing such frontage;

(2) the aggregate area of such obstructions, including any screening, does not exceed 50 percent of the #lot coverage# of the #building#, and the height of such obstructions shall not exceed 15 feet above the maximum permitted height, except where otherwise permitted by paragraph (3) of this Section;

(3) the aggregate area of such obstructions, including any screening, does not to exceed 30 percent of the #lot coverage# of the #building#, and the height of such obstructions shall not exceed:

(i) where the maximum permitted height of a #building# is 120 feet or lower, a height of 35 feet above the maximum permitted height;

(ii) where the maximum permitted height of a #building# is greater than 120 feet, a height of 55 feet above the maximum permitted height; and

(4) all equipment shall be subject to the applicable provisions of Section 37-20 (SPECIAL SCREENING AND ENCLOSURE PROVISIONS);

(c) House of worship towers, ornamental, having no #floor area# in portion of tower penetrating such height limit or #sky exposure plane#;

(d) #Qualifying rooftop greenhouses#, up to 25 feet in height, provided that such obstruction shall be located not less than six feet from the #street wall# of the #building#;

(e) Spires or belfries;

(f) Wind energy systems, #accessory# or as part of #energy infrastructure equipment#, on portions of #buildings# with a height of 100 feet or greater, provided that:

(1) the highest point of the wind turbine assembly does not exceed 55 feet;

(2) no portion of the wind turbine assembly is closer than 10 feet to any #lot line#; and

(3) in districts where new #residences# or new #joint living-work quarters for artists# are allowed as-of-right or by special permit or authorization, or within 100 feet of such districts, the diameter of the swept area of the rotor does not exceed 15 feet.

33-43 - Maximum Height of Walls and Required Setbacks

LAST AMENDED
12/5/2024

C1 C2 C3 C4 C5 C6 C8

In the districts indicated, if the front wall or other portion of a #building or other structure# is located at the #street line# or within the #initial setback distance# set forth in this Section, the height of such front wall or other portion of a #building or other structure# shall not exceed the maximum height above #curb level# set forth in this Section. Above such specified maximum height and beyond the #initial setback distance#, the #building or other structure# shall not penetrate the #sky exposure plane# set forth in this Section. The regulations of this Section shall apply except as otherwise provided in Sections 33-42 (Permitted Obstructions), 33-44 (Alternate Front Setbacks), 33-45 (Tower Regulations), or 33-49 (Special Height Limitations), inclusive.

33-431 - In C1 or C2 Districts with bulk governed by surrounding Residence District

LAST AMENDED
12/5/2024

C1-1 C1-2 C1-3 C1-4 C1-5 C2-1 C2-2 C2-3 C2-4 C2-5

In the districts indicated, the maximum height of a front wall and the required front setback of a #building or other structure# shall be determined by the #Residence District# within which such #Commercial District# is mapped and, except as otherwise set forth in this Section, shall be as set forth in the following table:

MAXIMUM HEIGHT OF FRONT WALL AND REQUIRED FRONT SETBACKS

#Initial Setback Distance# (in feet)		Maximum Height of a Front Wall or other portion of a #Building or Other Structure# within the #Initial Setback Distance#	#Sky Exposure Plane#				
			Height above the #Street Line# (in feet)	Slope over #Zoning Lot# (Expressed as a Ratio of Vertical Distance to Horizontal Distance)			
				On #Narrow Street#		On #Wide Street#	
On #Narrow Street#	On #Wide Street#			Vertical Distance	Horizontal Distance	Vertical Distance	Horizontal Distance
Within R1, R2, R3, R4, R5, R5A or R5B Districts							
20	15	30 feet or two #stories#, whichever is less	30	1	to 1	1	to 1
Within R6 or R7 Districts							

20	15	60 feet or four #stories#, whichever is less	60	2.7	to 1	5.6	to 1
Within R8, R9, R10, R11 or R12 Districts							
20	15	85 feet or six #stories#, whichever is less	85	2.7	to 1	5.6	to 1

However, in accordance with the provisions of Section 32-42 (Location Within Buildings), no #commercial building# or portion thereof occupied by non-#residential uses# listed under Use Groups VI through X shall exceed in height 30 feet or two #stories#, whichever is less.

For #community facility buildings# or #buildings# used for both #community facility# #use# and #commercial# #use#, when located in #Commercial Districts# mapped within R4, R5, R5A or R5B Districts, the maximum height of a front wall shall be 35 feet or three #stories#, whichever is less, and the height above #street line# shall be 35 feet and, when mapped within R7-2 or R7-3 Districts, the maximum height of a front wall shall be 60 feet or six #stories#, whichever is less.

In C1 or C2 Districts mapped within R1, R2 or R3 Districts in the Borough of Staten Island or in Community District 10 in the Bronx, for #buildings# containing ambulatory diagnostic or treatment health care facilities listed under Use Group III(B), or child care services, as listed under the definition of #school# in Section 12-10 (DEFINITIONS), the maximum height of a front wall or other portion of a #building# within the #initial setback distance# shall be 35 feet, or three #stories#, whichever is less. However, such increased height shall only be permitted beyond 20 feet of a #Residence District#

boundary or beyond 20 feet of any portion of a #building# containing a #residential use# located in a #Commercial District#.

33-432 - In other Commercial Districts

LAST AMENDED
12/5/2024

C1-6 C1-7 C1-8 C1-9 C2-6 C2-7 C2-8 C3 C4 C5 C6 C8

In the districts indicated, the maximum height of a front wall and the required front setback of a #building or other structure#, except as otherwise set forth in this Section, shall be as set forth in the following table:

MAXIMUM HEIGHT OF FRONT WALL AND REQUIRED FRONT SETBACKS

#Initial Setback Distance# (in feet)		Maximum Height of a Front Wall or other portion of a #Building or Other Structure# within the #Initial Setback Distance#	#Sky Exposure Plane#				
			Height above the #Street Line# (in feet)	Slope over #Zoning Lot# (Expressed as a Ratio of Vertical Distance to Horizontal Distance)			
				On #Narrow Street#		On #Wide Street#	
On #Narrow Street#	On #Wide Street#			Vertical Distance	Horizontal Distance	Vertical Distance	Horizontal Distance
Within C3 C4-1 C8-1 Districts							
20	15	30 feet or two #stories#, whichever is less	30	1	to 1	1	to 1
Within C1-6 C2-6 C4-2 C4-3 C4-4 C4-5 C8-2 C8-3 Districts							

20	15	60 feet or four #stories#, whichever is less	60	2.7	to 1	5.6	to 1

Within C1-7 C1-8 C1-9 C2-7 C2-8 C4-2F C4-6 C4-7 C4-8 C4-9 C4-11 C4-12 C5 C6 C8-4 Districts

20	15	85 feet or six #stories#, whichever is less	85	2.7	to 1	5.6	to 1

However, in accordance with the provisions of Section 32-42 (Location within Buildings), in C1, C2 or C3 Districts, no #commercial building#, or portion thereof, occupied by non-#residential uses# listed under Use Groups VI through X shall exceed in height 30 feet or two #stories#, whichever is less.

In C4-1 or C8-1 Districts, for #community facility buildings# or #buildings# used for both #community facility# and #commercial# #use#, the maximum height of a front wall shall be 35 feet or three #stories#, whichever is less, and the height above #street line# shall be 35 feet.

In C1-6, C2-6, C4-4 or C4-5 Districts, for #community facility buildings# or #buildings# used for both #community facility# and #commercial# #use#, the maximum height of a front wall shall be 60 feet or six #stories#, whichever is less.

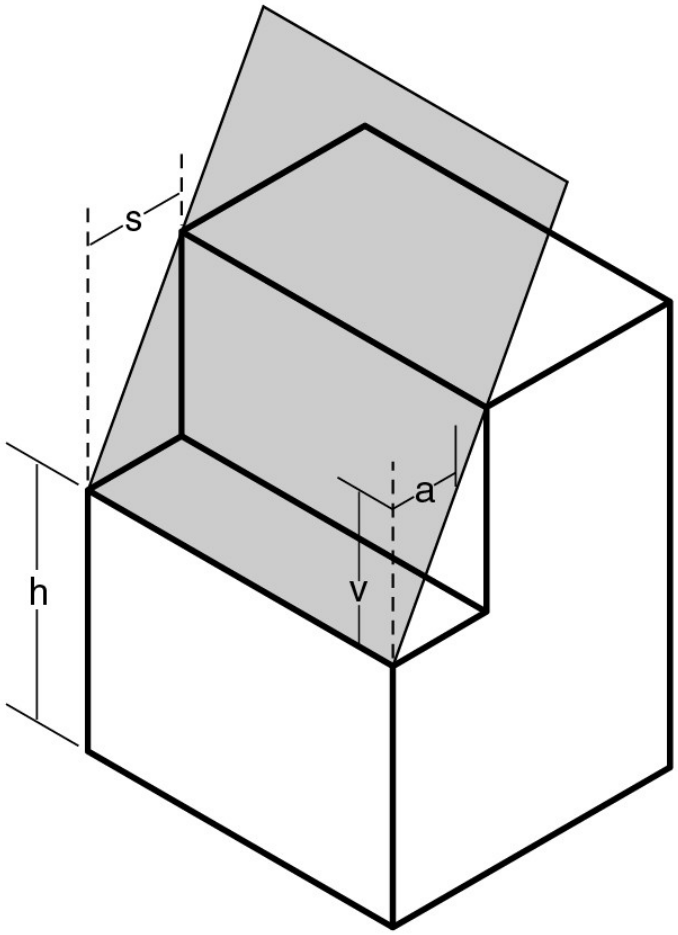

a - Horizontal distance
s - *Initial setback distance*
h - Height of *sky exposure plane* above *street line*
v - Vertical distance

Sky Exposure Plane

SKY EXPOSURE PLANE IN OTHER COMMERCIAL DISTRICTS

(23 - 632, 24 - 522, 33 - 432, 43 - 43)

33-433 - Special height and setback regulations

LAST AMENDED

12/5/2024

(a) Within the boundaries of Community District 7 in the Borough of Manhattan, all #buildings or other structures# located in #Commercial Districts# with a #residential equivalent# of an R10 District without a letter suffix shall comply with the requirements of Section 23-43 (Height and Setback Requirements in R6 Through R12 Districts).

(b) Within the boundaries of Community District 9 in the Borough of Manhattan, all #buildings# located in R8 Districts north of West 125th Street shall be #developed# or #enlarged# pursuant to paragraph (a)(1) of Section 23-442 (Special provisions for certain community districts).

(c) In C1 or C2 Districts mapped within R5D Districts, all #buildings or other structures# shall comply with the applicable height and setback requirements of Section 23-42 (Height and Setback Requirements in R1 Through R5 Districts), inclusive.

33-44 - Alternate Front Setbacks

LAST AMENDED
12/5/2024

C1 C2 C3 C4 C5 C6 C8

In the districts indicated, if an open area is provided along the full length of the #front lot line# with the minimum depth set forth in this Section, the provisions of Section 33-43 (Maximum Height of Walls and Required Setbacks) shall not apply. The minimum depth of such open area shall be measured perpendicular to the #front lot line#. However, in such instances, except as otherwise provided in Sections 33-42 (Permitted Obstructions), or 33-45 (Tower Regulations), inclusive, no #building or other structure# shall penetrate the alternate #sky exposure plane# set forth in this Section, and the #sky exposure plane# shall be measured from a point above the #street line#.

If the open area provided under the terms of this Section is a #public plaza#, such open area may be counted for the bonus provided for a #public plaza# in the districts indicated in Section 33-13 (Floor Area Bonus for a Public Plaza).

33-441 - In C1 or C2 Districts with bulk governed by surrounding Residence District

LAST AMENDED
12/5/2024

C1-1 C1-2 C1-3 C1-4 C1-5 C2-1 C2-2 C2-3 C2-4 C2-5

In the districts indicated, the alternate front setback regulations applicable to a #building or other structure# shall be determined by the #Residence District# in which such #Commercial District# is mapped and, except as otherwise set forth in this Section, shall be as set forth in the following table:

ALTERNATE REQUIRED FRONT SETBACKS

Depth of Optional Front Open Area (in feet)	Alternate #Sky Exposure Plane#		
	Height above #Street Line# (in feet)	Slope over #Zoning Lot# (expressed as a ratio of vertical distance to horizontal distance)	
		On #Narrow Street#	On #Wide Street#

On #Narrow Street#	On #Wide Street#	Vertical Distance	Horizontal Distance	Vertical Distance	Horizontal Distance	
Within R1, R2, R3, R4, R5, R5A or R5B Districts						
15	10	30	1.4	to 1	1.4	to 1
Within R6 or R7 Districts						
15	10	60	3.7	to 1	7.6	to 1
Within R8, R9, R10, R11 or R12 Districts						
15	10	85	3.7	to 1	7.6	to 1

However, in accordance with the provisions of Section 32-42 (Location within Buildings), no #commercial building#, or portion thereof, occupied by non-#residential uses# listed under Use Groups VI through X shall exceed in height 30 feet or two #stories#, whichever is less.

For #community facility buildings# or #buildings# used for both #community facility# #use# and #commercial# #use#, when mapped within R4, R5, R5A or R5B Districts, the height above #street line# shall be 35 feet.

33-442 - In other Commercial Districts

LAST AMENDED

C1-6 C1-7 C1-8 C1-9 C2-6 C2-7 C2-8 C3 C4 C5 C6 C8

In the districts indicated, the alternate front setback regulations applicable to a #building or other structure# shall be as set forth in the following table:

ALTERNATE REQUIRED FRONT SETBACKS

Depth of Optional Front Open Area (in feet)		Alternate #Sky Exposure Plane#				
		Height above #Street Line# (in feet)	Slope over #Zoning Lot# (Expressed as a Ratio of Vertical Distance to Horizontal Distance)			
			On #Narrow Street#		On #Wide Street#	
On #Narrow Street#	On #Wide Street#		Vertical Distance	Horizontal Distance	Vertical Distance	Horizontal Distance
Within C3 C4-1 C8-1 Districts						
15	10	30	1.4	to 1	1.4	to 1
Within C1-6 C2-6 C4-2 C4-3 C4-4 C4-5 C8-2 C8-3 Districts						
15	10	60	3.7	to 1	7.6	to 1

Within C1-7 C1-8 C1-9 C2-7 C2-8 C4-2F C4-6 C4-7 C4-8 C4-9 C4-11 C4-12 C5 C6 C8-4 Districts						
15	10	85	3.7	to 1	7.6	to 1

However, in accordance with the provisions of Section 32-42 (Location Within Buildings), in C1, C2 or C3 Districts, no #commercial building# or portion thereof occupied by #uses# listed under Use Groups VI through X shall exceed in height 30 feet or two #stories#, whichever is less.

In C4-1 or C8-1 Districts, for #community facility buildings# or #buildings# used for both #community facility# #use# and #commercial# #use#, the maximum height above #street line# shall be 35 feet or three #stories#, whichever is less.

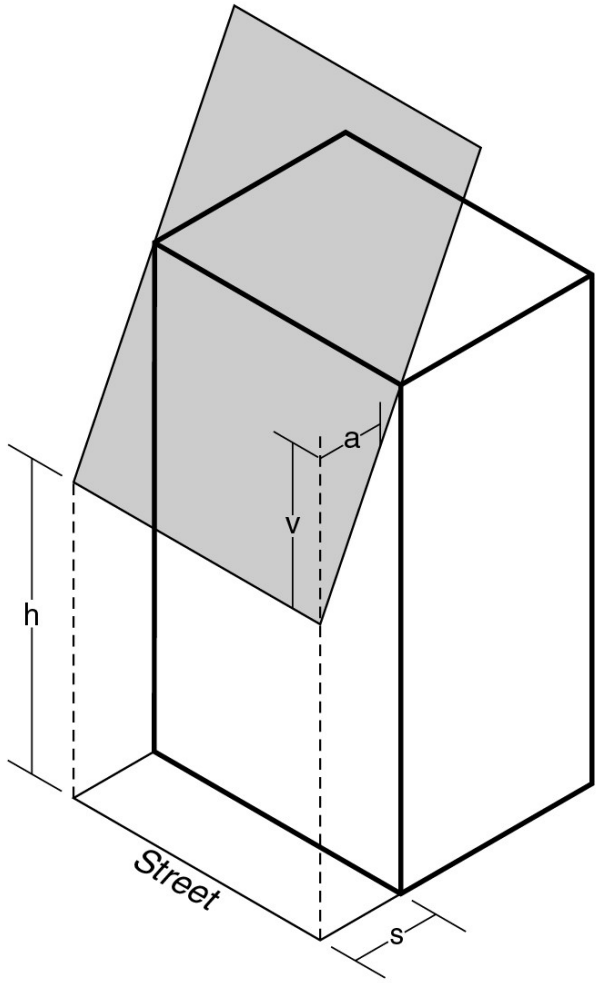

a - Horizontal distance

h - Height of *sky exposure plane* above *street line*

s - Depth of the optional front open area

v - Vertical distance

Sky Exposure Plane

ALTERNATE SKY EXPOSURE PLANE

(23-736, 24-53, 33-442, 43-44)

33-45 - Tower Regulations

LAST AMENDED

12/15/1961

33-451 - In certain specified Commercial Districts

LAST AMENDED
12/5/2024

C4-7 C5-2 C5-3 C5-4 C5-5 C6-4 C6-5 C6-6 C6-7 C6-8 C6-9 C6-11 C6-12

In the districts indicated, any #buildings# or portions thereof which in the aggregate occupy not more than 40 percent of the #lot area# of a #zoning lot# or, for #zoning lots# of less than 20,000 square feet, the percent set forth in Section 33-454 (Towers on small lots), may penetrate an established #sky exposure plane#. (Such #building# or portion thereof is hereinafter referred to as a tower.) At any given level, except where the provisions set forth in Section 33-455 (Alternate regulations for towers on lots bounded by two or more streets) or 33-456 (Alternate setback regulations on lots bounded by two or more streets) or 33-457 (Tower setbacks on narrow blocks) are applicable and where the option is taken to be governed by such provisions, such tower may occupy any portion of the #zoning lot# not located less than 15 feet from the #street line# of a #narrow street#, or less than 10 feet from the #street line# of a #wide street#, provided that the aggregate area so occupied within 50 feet of a #narrow street# shall not exceed 1,875 square feet and the aggregate area so occupied within 40 feet of a #wide street# shall not exceed 1,600 square feet.

If all of the #buildings# on a #zoning lot# containing such tower do not occupy at any level more than the maximum percent of the #lot area# set forth in this Section or Section 33-454 for towers, the tower may occupy any portion of the #zoning lot# located 20 feet or more from the #street line# of a #narrow street# or 15 feet or more from the #street line# of a #wide street#, provided that the aggregate area so occupied within 50 feet of a #narrow street# shall not exceed 2,250 square feet and the aggregate area so occupied within 40 feet of a #wide street# shall not exceed 2,000 square feet.

Unenclosed balconies, subject to the provisions of Section 24-164 (Balconies), are permitted to project into or over open areas not occupied by towers.

33-452 - Community facility buildings in C1 or C2 Districts when mapped within R7-2 through R12 Districts

LAST AMENDED
12/5/2024

C1-1 C1-2 C1-3 C1-4 C1-5 C2-1 C2-2 C2-3 C2-4 C2-5

In the districts indicated, when mapped within an R7-2, R7-3, R8, R9, R10, R11 or R12 District, the provisions set forth in Section 33-451 (In certain specified Commercial Districts) shall apply to any #community facility building#. If a #building# is used for both #community facility# and #commercial# #uses#, no portion of such #building# occupied by #commercial# #use# shall penetrate the #sky exposure plane# as set forth in Sections 33-43 (Maximum Height of Walls and Required Setbacks) or 33-44 (Alternate Front Setbacks).

33-453 - Community facility buildings in certain specified Commercial Districts

LAST AMENDED
12/5/2024

C1-6 C1-7 C1-8 C1-9 C2-6 C2-7 C2-8 C4-4 C4-5 C4-6 C4-8 C4-9 C4-11 C4-12 C5-1 C6-1 C6-2 C6-3 C8-3 C8-4

In the districts indicated, the provisions set forth in Section 33-451 (In certain specified Commercial Districts) shall apply to any #community facility building#. If a #building# is used for both #community facility# and #commercial# #uses#, no portion of such #building# occupied by #commercial# #use# shall penetrate the #sky exposure plane# as set forth in Section 33-43 (Maximum Height of Walls and Required Setbacks) or 33-44 (Alternate Front Setbacks).

33-454 - Towers on small lots

LAST AMENDED
12/5/2024

C1 C2 C4-4 C4-5 C4-6 C4-7 C4-8 C4-9 C4-11 C-4-12 C5 C6 C8-3 C8-4

In the districts indicated, a tower permitted under the provisions of Sections 33-451 (In certain specified Commercial Districts), 33-452 (Community facility buildings in C1 or C2 Districts when mapped within R7-2 through R12 Districts) or 33-453 (Community facility buildings in certain specified Commercial Districts) may occupy the percent of the #lot area# of a #zoning lot# set forth in the following table:

LOT COVERAGE OF TOWERS ON SMALL ZONING LOTS

Area of #Zoning Lot# (in square feet)	Maximum Percent of #Lot Coverage#
10,500 or less	50
10,501 to 11,500	49
11,501 to 12,500	48
12,501 to 13,500	47
13,501 to 14,500	46

14,501 to 15,500	45
15,501 to 16,500	44
16,501 to 17,500	43
17,501 to 18,500	42
18,501 to 19,999	41

33-455 - Alternate regulations for towers on lots bounded by two or more streets

LAST AMENDED
12/5/2024

C5-3 C5-5 C6-6 C6-7 C6-9 C6-11 C6-12

In the districts indicated, if a #zoning lot# is bounded by at least two #street lines#, a tower may occupy the percent of the #lot area# of a #zoning lot# set forth in this Section, provided that, except as otherwise set forth in Section 33-457 (Tower setbacks on narrow blocks), all portions of any #building# or #buildings# on such #zoning lot#, including such tower, are set back from #street lines# as required in this Section.

(a) The maximum percent of #lot area# that may be occupied by such tower, shall be the sum of 40 percent plus one-half of one percent for every .10 by which the #floor area ratio# of such #zoning lot# is less than the #floor area ratio# permitted under the provisions of Sections 33-12 (Maximum Floor Area Ratio), 33-13 (Floor Area Bonus for a Public Plaza) or 33-14 (Floor

Area Bonus for Arcades). The maximum #lot coverage# for any tower built under the provisions of this Section or for any #building# or #buildings# on any #zoning lot# occupied by such tower shall be 55 percent of the #lot area# of such #zoning lot#.

(b) At all levels, including ground level, such #building# shall be set back from the #street line# as follows:

(1) On #narrow streets#, by a distance equal to at least the fraction of the #aggregate width of street walls# of the tower, the numerator of which fraction is one and the denominator of which fraction is the sum of 3.0 plus .0667 for every .10 by which the #floor area ratio# of such #building# is less than the #floor area ratio# permitted under the provisions of Sections 33-12, 33-13 or 33-14, provided that such fraction shall be no less than one-fifth, and provided further that such setback need not exceed 45 feet.

(2) On #wide streets#, by a distance equal to at least the fraction of the #aggregate width of street walls# of the tower, the numerator of which fraction is one and the denominator of which fraction is the sum of 4.0 plus .10 for every .10 by which the #floor area ratio# of such #building# is less than the #floor area ratio# permitted under the provisions of Sections 33-12, 33-13 or 33-14, provided that such fraction shall be no less than one-seventh, and provided further that such setback need not exceed 35 feet.

(c) If a #zoning lot# occupies an entire #block#, the maximum setback, set forth in paragraph (b) of this Section, of 45 feet on each #narrow street# bounding the #zoning lot# may be reduced by one foot for every six feet of setback provided on a #wide street# bounding the #zoning lot# in addition to the setbacks otherwise required for #wide streets# as set forth in such paragraph, provided that no setback on a #narrow street# resulting from such reduction shall be less than 35 feet or one-tenth the #aggregate width of street walls# of the tower, whichever shall require the greater setback.

(d) The additional setbacks on #wide streets# set forth in paragraph (c) of this Section may be provided entirely on one #wide street# or divided in any proportion among any two #wide streets# bounding the #zoning lot#.

(e) Notwithstanding any other provision set forth in this Section, no #building# or portion of a #building# built under the provisions of this Section shall be set back less than 25 feet from the #street line# on #narrow streets# or less than 15 feet from the #street line# on #wide streets#.

33-456 - Alternate setback regulations on lots bounded by two or more streets

LAST AMENDED
12/5/2024

C5-3 C5-5 C6-6 C6-7 C6-9 C6-11 C6-12

In the districts indicated, except as otherwise set forth in Section 33-457 (Tower setbacks on narrow blocks), if a #zoning lot# is bounded by at least two #street lines#, a tower occupying not more than the percent of #lot area# set forth in Section 33-451 (In certain specified Commercial Districts) or 33-454 (Towers on small lots), may be set back from a #street line# as follows:

(a) On #narrow streets#, by a distance equal to at least the fraction of the #aggregate width of street walls# of the tower, the numerator of which fraction is one and the denominator of which fraction is the sum of 3.0 plus .0333 for each .10 by which the #floor area ratio# of the #zoning lot# is less than the #floor area ratio# permitted under the provisions of Section 33-12 , 33-13 or 33-14, provided that such fraction shall be no less than one-fifth, and provided further that such setback need not exceed 45 feet.

(b) On #wide streets#, by a distance equal to at least the fraction of the #aggregate width of street walls# of the tower, the numerator of which fraction is one and the denominator of which fraction is the sum of 4.0 plus .05 for each .10 by which the #floor area ratio# of the #zoning lot# is less than the #floor area ratio# permitted under the provisions of Sections 33-12 (Maximum Floor Area Ratio), 33-13 (Floor Area Bonus for a Public Plaza) or 33-14 (Floor Area Bonus for Arcades), provided that such fraction shall be no less than one-seventh, and provided further that such setback need not exceed 35 feet.

(c) Notwithstanding any other provisions set forth in this Section, no tower built under the provisions of this Section shall be set back less than 25 feet from the #street line# on #narrow streets# or less than 15 feet from the #street line# on #wide streets#.

33-457 - Tower setbacks on narrow blocks

LAST AMENDED
12/5/2024

C5-3 C5-5 C6-6 C6-7 C6-9 C6-11 C6-12

In the districts indicated, if a #zoning lot# is bounded by at least three #street lines#, and any two of the #street lines# are opposite to each other and parallel or within 45 degrees of being parallel to each other, and their average distance apart is 150 feet or less, the minimum distance a tower is required to be set back from such opposite #street lines# under the provisions of Section 33-455 (Alternate regulations for towers on lots bounded by two or more streets) or Section 33-456 (Alternate setback regulations on lots bounded by two or more streets), is reduced in accordance with the following table:

TOWER SETBACKS ON NARROW BLOCKS

	Reduction of Required Tower Setback	Minimum Setback for Tower Built under Provisions of this Section
On #narrow street#	30 percent or 10 feet, whichever is less	15 feet
On #wide street#	40 percent or 10 feet, whichever is less	10 feet

33-46 - Height and Setback Provisions for C7 Districts

LAST AMENDED
6/6/2024

For C7 Districts, a #building or other structure# shall not exceed the maximum base heights or maximum #building# height set forth in paragraph (a) of this Section. A setback is required for all portions or #buildings or other structures# that exceed the maximum base height specified in paragraph (a) and shall be provided in accordance with paragraph (b). In districts without a maximum height limit, the tower provisions set forth in paragraph (c) shall apply.

(a) Maximum base heights and maximum #building# heights

The table below sets forth the maximum base heights and maximum #building or other structure# heights.

MAXIMUM BASE HEIGHT AND MAXIMUM BUILDING HEIGHT

District	Maximum Base Height (in feet)	Maximum Height of #Buildings or other Structures# (in feet)
C7-1	45	65
C7-2	65	95
C7-3	95	125
C7-4	125	155
C7-5	155	205
C7-6	155	245
C7-7	155	325
C7-8 C7-9	155	N/A

In addition, for #zoning lots# with a #lot area# greater than or equal to 20,000 square feet, a #building# may exceed the maximum building heights established in such table by 25 percent.

(b) Any portion of a #building# above the maximum base height shall provide a setback with a depth of at least 10 feet from any #street wall# fronting on a #wide street# and a depth of at least 15 feet from any #street wall# fronting on a #narrow street#. However, such setback requirement may be modified as follows:

(1) the depth of such required setback may be reduced by one foot for every foot that the #street wall# is located beyond the #street line#, but in no event shall a setback of less

than seven feet in depth be provided, except as otherwise set forth in this Section. To allow #street wall# articulation, where a #street wall# is divided into different segments and located at varying depths from the #street line#, such permitted setback reduction may be applied to each #street wall# portion separately;

(2) the depth of such required setbacks may include the depth of recesses in the #street wall# of the #building# base, provided that the aggregate width of any such recessed portion of a #street wall# with a setback less than seven feet, does not exceed 30 percent of the #aggregate width of #street wall# at any level;

(3) these setback provisions are optional for any #building that either is located beyond 50 feet of a #street line# or oriented so that lines drawn perpendicular to it, in plan, would intersect a #street line# at an angle of 65 degrees or less. In the case of an irregular #street line#, the line connecting the most extreme points of intersection shall be deemed to be the #street line#; and

(4) dormers may penetrate a required setback area, provided that the aggregate width of all dormers at the maximum base height does not exceed 40 percent of the width of the #street wall# of the highest #story# entirely below the maximum base height#. Such dormers need not decrease in width as the height above the maximum base height increases.

(c) Towers

For #buildings# in C7-8 and C7-9 Districts, no maximum height limit shall apply. However, any portion of a #building# above a height of 350 feet shall have a maximum #lot coverage# of 50 percent of the #lot area# of the #zoning lot#.

33-47 - Modification of Height and Setback Regulations

LAST AMENDED
12/15/1961

33-471 - Commercial and community facility uses

LAST AMENDED
12/5/2024

C5-5 C6-8 C6-9 C6-11 C6-12 C8

In the districts indicated, for #commercial# or #community facility# #uses# in specified situations, the Board of Standards and Appeals may modify the regulations set forth in Sections 33-41 (Definitions) to 33-45 (Tower Regulations), inclusive, relating to Height and Setback Regulations, in accordance with the provisions of Section 73-68 (Height and Setback and Yard Modifications).

33-472 - Community facility uses

LAST AMENDED
12/5/2024

C1 C2 C3 C4 C5 C6 C7 C8

In all districts, as indicated, for certain #community facility# #uses# in specified situations, the Board of Standards and Appeals may modify the regulations set forth in Sections 33-40 through 33-45, inclusive, relating to Height and Setback Regulations in accordance with the provisions of Section 73-64 (Modifications for community facility uses).

33-473 - Special provisions for zoning lots directly adjoining public parks

LAST AMENDED
6/6/2024

C1 C2 C3 C4 C5 C6 C7 C8

In all districts, as indicated, a #public park# with an area of between one and 15 acres shall be considered a #wide street# for the purpose of applying the front height and setback regulations specified in Section 33-43 (Maximum Height of Walls and Required Setbacks) to any #building or other structure# on a #zoning lot# adjoining such #public park#. However, this Section shall not apply to a #public park# more than 75 percent of which is paved.

33-48 - Special Provisions for Zoning Lots Divided by District Boundaries

LAST AMENDED
8/14/1987

C1 C2 C3 C4 C5 C6 C7 C8

In all districts, as indicated, whenever a #zoning lot# is divided by a boundary between districts, or is subject to other regulations resulting in different height and setback regulations, or whenever a #zoning lot# is divided by a boundary between a district to which the provisions of Section 33-45 (Tower Regulations) apply and a district to which such provisions do not apply, the provisions set forth in Article VII, Chapter 7, shall apply.

33-49 - Special Height and Setback Limitations

LAST AMENDED
12/5/2024

The provisions of this Section, inclusive, shall apply to #buildings# utilizing the #sky exposure plane# provisions of this Chapter. In no event shall such provisions apply to #buildings# that utilize the #residential# height and setback regulations of Section 23-40 (HEIGHT AND SETBACK REGULATIONS), inclusive, as modified by the provisions of Section 35-60 (MODIFICATION OF HEIGHT AND SETBACK REGULATIONS).

33-491 - Limited Height Districts

LAST AMENDED
6/29/1994

C1 C2 C3 C4 C5 C6 C7 C8

In all districts, as indicated, wherever such districts are located within a #Limited Height District#, the maximum height of a #building or other structure#, or portion thereof, shall be as shown in the following table:

#Limited Height District#	Maximum Height Above #Curb Level# or #Base Plane#, as Applicable
LH-1	50 feet

LH-1A	60 feet
LH-2	70 feet
LH-3	100 feet

33-492 - Height limitations for narrow buildings or enlargements

LAST AMENDED
12/5/2024

In C1 or C2 Districts mapped within, or with a #residential equivalent# of, R7-2, R8, R9 or R10 Districts, the provisions of Section 23-738 (Height limitations for narrow buildings) shall apply to portions of #buildings# with #street walls# less than 45 feet in width.